RED RIVER BANK - VETERANS BLVD. BRANCH

1914 Veterans Boulevard
Metairie, Louisiana 70005

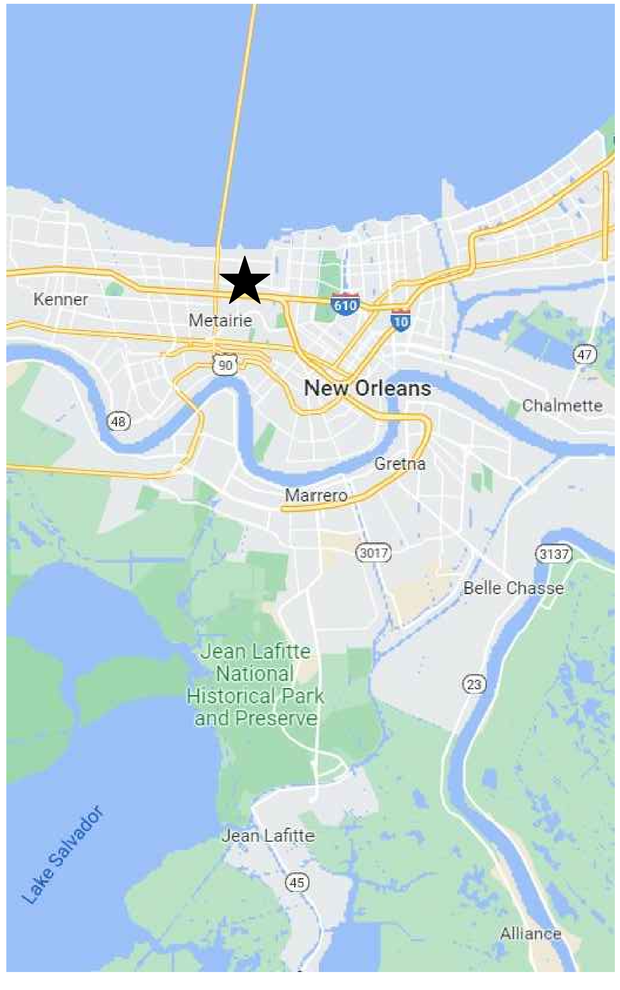

N

1 A1.0 **VICINITY PLAN**
SCALE: No Scale

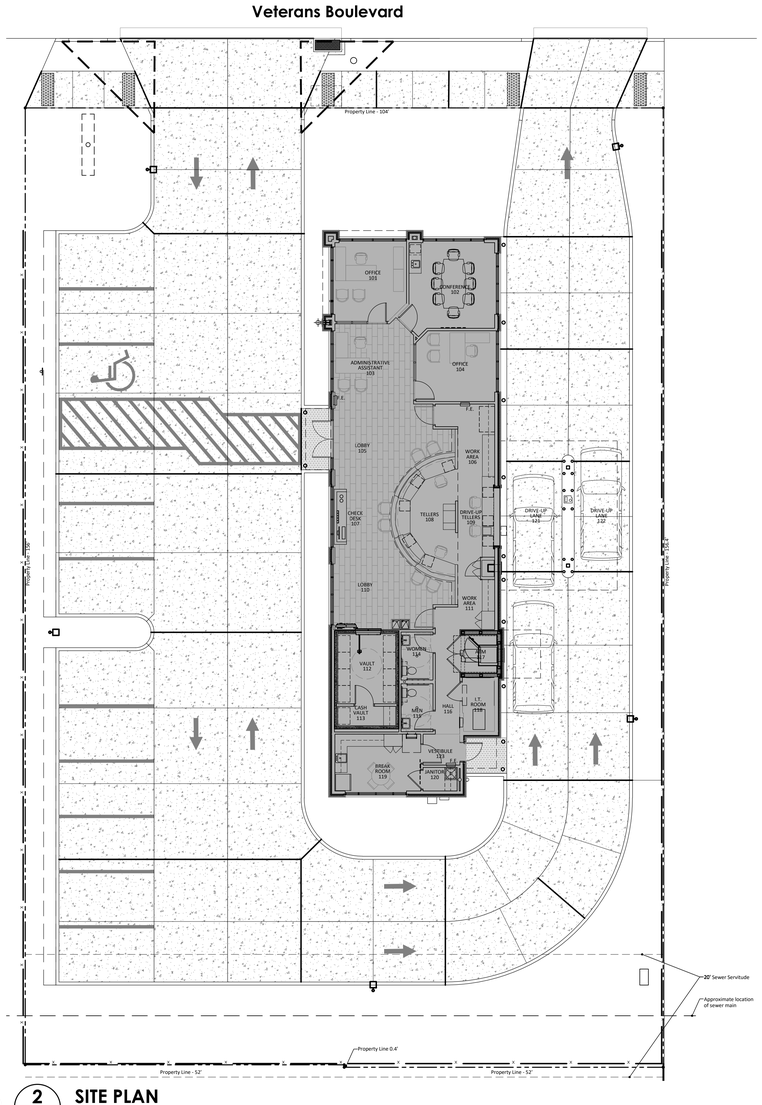

N

2 A1.0 **SITE PLAN**
SCALE: 1" = 20'-0"

BUILDING INFORMATION

This project involves construction of a new , single-story branch bank of 2,490 square feet located at 1914 Veterans Boulevard, Metairie, Louisiana 70005. The building shall be of Type V (000) construction as per N.F.P.A. 220. The interstitial space above the ceiling will not be subdivided by draft-stops as the building area does not exceeding 3,000 square feet. Additionally, the interstitial space above the ceiling is not a return-air plenum. There is no automatic fire suppression system. There is no fire alarm system.

OCCUPANCY TYPE:

N.F.P.A. 101 - Business
I.B.C. - Business

CONSTRUCTION TYPE:

N.F.P.A 220 - Type v (000)
I.B.C. - TYPE V (B)

ZONING CLASSIFICATION:

Primary Use - General Commercial
Special Overlay District - CPZ - Commercial Parkway
Building Height Restriction: 65'
Front Yard Setback - 20'
Side Yard Setback - 5'
Rear Yard Setback - 15'

FEMA FLOOD ZONE INFORMATION:

Flood Zone - "X" With Reduced Flood Risk Due To Levee

SYMBOL SCHEDULE

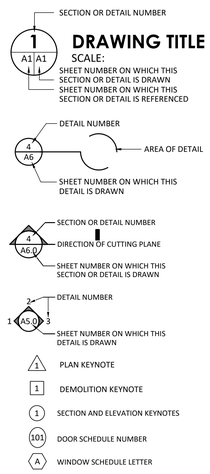

INDEX OF DRAWINGS

A1.0 Vicinity Map, Building Information, Symbol Schedule, Index of Drawings, Project Directory and General Construction Notes
A2.0 Topographical Survey

C1 Demolition Plan
C2 Storm Water Pollution Prevention Plan
C3 Grading and Drainage Plan
C4 Details

A2.1 Site Plan and Site Details
A3.0 Construction Plan
A4.0 Ceiling Plan
A5.0 Roof Plan
A6.0 Building Elevations
A7.0 Building Sections
A8.0 Building Details
A8.1 Building Details
A8.2 Building Details
A8.3 Building Details
A9.0 Room Finish Schedule, Door Schedule, Window Schedule, Door & Window Elevations, & Details
A10.0 Interior Elevations
A10.1 Interior Elevations & Details

S1.0 Foundation Plan
S1.1 Vault Anchor Plan & Sign Foundation Plan & Flagpole Support
S2.0 Intermediate Framing Plan
S3.0 Roof Framing Plan
S4.0 Foundation Sections
S5.0 Framing Sections
S6.0 General Notes & Typical Details

P0.0 Plumbing Schedules & Details
P1.0 Site Plan, Floor Plan & Roof Plan - Plumbing

M1.0 Floor Plan & Roof Plan - HVAC
M2.0 Mechanical Details - HVAC
M3.0 Mechanical Schedules - HVAC

ES1.0 Site Plan - Electrical
E1.0 Site Plan, Floor Plan & Roof Plan - Lighting
E2.0 Site Plan, Floor Plan & Roof Plan - Power
E3.0 Site Plan, Floor Plan & Roof Plan - Signal
E4.0 Electrical Schedules
E5.0 Electrical Details

GENERAL CONSTRUCTION NOTES

1. Contractor shall visit the project site prior to the start of construction and shall familiarize himself with all existing conditions. Any discrepancies shall be reported to the Architect for clarification and direction.
2. All work shall be done in full compliance with all applicable codes and regulations. Any discrepancies shall be reported immediately to the Architect for clarification.
3. Figured dimensions shall govern over scaled dimensions in all cases. Contractor shall verify all dimensions prior to the start of construction. Report any discrepancies to the Architect for clarification.
4. Contractor shall verify locations of existing utilities within the project area by visiting the site, and consulting with local utility companies and the Owner's representative. Verification shall occur prior to the start of construction. Any discrepancies shall be reported to the Architect for clarification. Contractor shall be responsible for all work necessary to provide utilities to the project.
5. Dimension lines are from the face of finish material to the face of finish material, typically. Refer to partition types and detail drawings for material thicknesses. Report any discrepancies to the Architect for Clarification.
6. General Contractor shall be responsible for coordinating and scheduling the work of the subcontractors. Inform the Architect immediately of any conflicts or potential delays.
7. General Contractor shall be responsible for all Work indicated on all sections of the Drawings and shall verify that each subcontractor is completely aware of their portion of the Work. The General Contractor shall insure that any work omitted from a subcontractor's bid is performed by that subcontractor or the General Contractor.
8. General Contractor shall be responsible for insuring that all work on the site which requires excavation of any kind be done as per all applicable regulations, especially LRS 40:1749.11, "Louisiana Underground Utilities and Facilities Damage Prevention Law", which states, "no person shall excavate or demolish without first ascertaining the location of underground utilities by serving telephonic notice to a regional notification program". The Contractor shall contact, by telephone, the regional notification program, "Louisiana Call One" at 1-800-584-4274 at all appropriate times during the project. The Contractor shall verify all pertinent procedures before starting any site work and shall report any discrepancies or changes in the regulations to the Architect.

PROJECT DIRECTORY

Owner: Red River Bank
1412 Centre Court
Alexandria, Louisiana 71301
Phone: 1.318.561.4000
Attn: Debbie Triche

Architect: Ashe Broussard Weinzettle Architects
301 Jackson Street Suite 205
Alexandria, LA 71301
Phone: 318.473.0252
Fax: 318.442.6007
Attn: Kevin Broussard

Structural: BluDot Engineering, LLC
1000 Chinaberry Drive
Suite 703
Bossier City, LA 71111
Phone: 318.402.4640
Atten: Jason Cottom

Mechanical: John G. Guth and Associates
208 Milam Street
Shreveport, LA 71101
Phone: 318.221.8638
Fax: 318.221.8717
Attn: Greg Grimes

Electrical: John G. Guth and Associates
208 Milam Street
Shreveport, LA 71101
Phone: 318.221.8638
Fax: 318.221.8717
Attn: Michael Clark

Plumbing: John G. Guth and Associates
208 Milam Street
Shreveport, LA 71101
Phone: 318.221.8638
Fax: 318.221.8717
Attn: Kevin Wilson

Civil: Pan American Engineers, LLC
1717 Jackson Street
Alexandria, LA 71301
Phone: 318.473.2100
Fax: 318.473.2275
Atten: Wesley Miller

Survey: Linfield, Hunter & Junius, INC.
3608 18th Street
Metairie, LA 70002
Phone: 504.833.5300
Fax: 504.833.5350
Atten: Nathan Junius

Geotech: Geotechnical Testing Laboratory, Inc.
226 Parkwood Drive
Alexandria, LA 71306
Phone: 318.443.7429
Fax: 318.443.1305
Atten: Ken Gorsha

Bank Equip: Hamilton Vaultronics
410 North Grove Road
Richardson, TX 75081
Phone: 504.812.4556
Atten: Neil Talbert

ASHE | BROUSSARD | WEINZETTLE
ARCHITECTS

This drawing and design are the property of Ashe Broussard Weinzettle Architects. They are submitted on the condition that they are not to be used, reproduced, or copied, in whole or in part, or used for furnishing information to others, without the prior written consent of Ashe Broussard Weinzettle Architects. All common law rights of copyright and otherwise are hereby specifically reserved.

KEVIN R. BROUSSARD No. 3894 STATE OF LOUISIANA REGISTERED ARCHITECT

REVISIONS

revision	description	date
	-	-
	-	-

RED RIVER BANK
1918 Veterans Boulevard
Metairie, Louisiana 70005

project no. **2021.53**
drawn **KRB**
checked **#**
project date **January 2023**

sheet contents
Title Sheet, Vicinity Plan, Drawing Index

drawing no. **A1.0**

SQ. NO. 45, BONNABEL PLACE SUBDIVISION
LOT 17–1–A, PARCEL B, PARCEL C
METAIRIE
JEFFERSON PARISH
LOUISIANA

LEGEND

	EXIST. GUY WIRE
(SIZE)	EXIST. DRAIN LINE
	EXIST. CONC. AREA
	OVERHEAD UTILITY
	EXIST. BOUNDARY LINE
T	EXIST. UG TELEPHONE LINE
S(SIZE)	EXIST. GRAVITY SEWER LINE
W(SIZE)	EXIST. WATER LINE
G(SIZE)	EXIST. GAS LINE
	EXIST. WOODEN FENCE
	LINE NOT TO SCALE
TEL PED	EXIST. TELECOMMUNICATIONS PEDESTAL
E	EXIST. ELECTRICAL BOX
S	EXIST. SEWER MANHOLE
	EXIST. SIGN
	EXIST. POWERPOLE
	EXIST. FIRE HYDRANT
C O	EXIST. SEWER CLEANOUT
5.25	EXIST. SPOT ELEVATION
	EXIST. PARKING BLOCK
	SET IRON ROD
XCUT	FOUND X–CUT
WM	EXIST. WATER METER
	EXIST. BATCH BASIN

STANDARD ABBREVIATIONS

S.M.H.	SEWER MANHOLE
T.O.C.	TOP OF CASTING
INV.	INVERT
S.F.	SQUARE FEET
EXIST.	EXISTING
R.C.P.	REINFORCED CONC. PIPE
T.B.M.	TEMPORARY BENCHMARK
C.B.	CATCH BASIN
N.T.S.	NOT TO SCALE

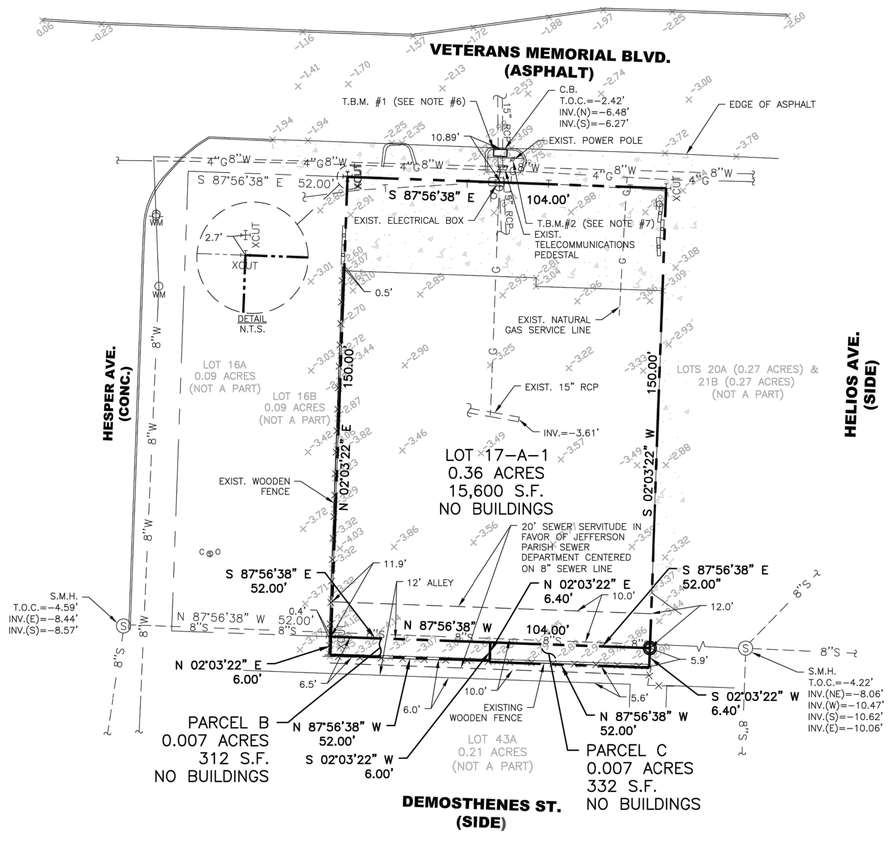

SITE — VICINITY MAP (NOT TO SCALE)

REFERENCE PLATS:

1. SURVEY BY GILBERT, KELLY & COUTURIE, INC. ENTITLED "SQ. NO. 45, BONNABEL PLACE JEFFERSON PARISH, LA" DATED DECEMBER 29, 2005.
2. SURVEY BY GILBERT, KELLY & COUTURIE, INC. ENTITLED "SQ. NO. 45, BONNABEL PLACE JEFFERSON PARISH, LA" DATED DECEMBER 31, 1999.

NOTES:

1. THE LOCATIONS OF UNDERGROUND AND OTHER NONVISIBLE UTILITIES SHOWN HEREON HAVE BEEN PLOTTED BASED UPON DATA EITHER FURNISHED BY THE AGENCIES CONTROLLING SUCH DATA AND/OR OBTAINED FROM RECORDS MADE AVAILABLE TO US BY THE AGENCIES CONTROLLING SUCH RECORDS. WHERE FOUND, THE SURFACE FEATURES OF UTILITIES ARE SHOWN. THE ACTUAL NONVISIBLE LOCATIONS MAY VARY FROM THOSE SHOWN HEREON. EACH AGENCY SHOULD BE CONTACTED RELATIVE TO THE PRECISE LOCATION OF ITS UNDERGROUND INSTALLATIONS PRIOR TO ANY RELIANCE UPON THE ACCURACY OF SUCH LOCATIONS SHOWN HEREON. PRIOR TO EXCAVATION AND DIGGING CALL LA ONE CALL (1–800–272–3020).
2. BEARINGS SHOWN ARE BASED ON REFERENCE PLAT #1.
3. THIS IS A CLASS B BOUNDARY SURVEY.
4. ELEVATIONS SHOWN ARE NAVD88 AND ARE BASED ON RTK GPS SURVEYING (LEICA SMARTNET).
5. THE SURVEY SHOWN HEREON IS MADE IN ACCORDANCE TO THE MINIMUM STANDARDS FOR THE PROPERTY BOUNDARY SURVEYS AS ADOPTED BY THE LOUISIANA STATE BOARD OF REGISTRATION FOR PROFESSIONAL ENGINEERS AND LAND SURVEYORS.
6. T.B.M. #1 IS WEST BOLT ON CATCH BASIN ON THE NORTH SIDE OF THE SITE ALONG VETERANS MEMORIAL BLVD. ELEV.=–2.51'
7. T.B.M. #2 IS 60D NAIL SET ON THE SOUTH SIDE OF THE UTILITY POLE ON THE NORTH SIDE OF THE SITE ALONG VETERANS BLVD. ELEV.=–1.02'
8. EXISTING NATURAL GAS SERVICE PIPELINES ON PRIVATE PROPERTY ARE SHOWN BASED ON MAP PROVIDED BY ATMOS ENERGY.

REV. 1– REVISED TO SHOW SPOT ELEVATIONS ON VETERANS MEMORIAL BLVD. DATE: 12/09/2022

REV. 2– REVISED TO SHOW SPOT ELEVATIONS ON VETERANS MEMORIAL BLVD, ACCURATE SIZE AND LOCATION OF REQUESTED ITEMS, & DIMENSION OF FACE OF GUTTER TO PROPERTY LINE. DATE: 01/12/2023

REV. 3– REVISED TO SHOW PARCEL B AND PARCEL C. DATE: 04/05/2023

N

20' 0 20' 40' 60' 80'

24" X 36" SCALE: 1" = 20'

LINFIELD, HUNTER & JUNIUS, INC.
PROFESSIONAL ENGINEERS, ARCHITECTS AND SURVEYORS
3608 18th Street, Suite 200
Metairie, Louisiana 70002

©2023 by Linfield, Hunter & Junius, Inc.

STATE OF LOUISIANA NATHAN JOHN JUNIUS License No. 4995 PROFESSIONAL LAND SURVEYOR 12/09/22

BOUNDARY SURVEY

NATHAN J. JUNIUS, P.E., P.L.S.

DECEMBER 9, 2022

LH&J JOB No. 22–064

(504) 833–5300

ASHE | BROUSSARD | WEINZETTLE ARCHITECTS

This drawing and design are the property of Ashe Broussard Weinzettle Architects. They are submitted on the condition that they are not to be used, reproduced, or copied, in whole or in part, or used for furnishing information to others, without the prior written consent of Ashe Broussard Weinzettle Architects. All common law rights of copyright and otherwise are hereby specifically reserved.

KEVIN R. BROUSSARD No. 3894 STATE OF LOUISIANA REGISTERED ARCHITECT

REVISIONS

revision	description	date
	-	-
	-	-

RED RIVER BANK

1918 Veterans Boulevard
Metairie, Louisiana 70005

project no. 2021.53
drawn KRB
checked
project date January 2023

sheet contents: **Topographical Survey**

drawing no. **A2.0**

4 VICINITY MAP
N.T.S.

3 LEGEND

ITEMS TO BE REMOVED

ITEMS TO BE REMOVED

2 DEMOLITION NOTES

1. THE CONTRACTOR IS RESPONSIBLE FOR DEMOLITION, REMOVAL AND DISPOSAL, IN A LAWFUL MANNER, OF STRUCTURES, WALLS, FOUNDATIONS, PADS, PAVEMENT, SIDEWALKS, DRAINAGE, UTILITIES, ETC., TO ALLOW FOR THE CONSTRUCTION OF IMPROVEMENTS SHOWN ON THE REMAINING PLANS. FINISH GRADES SHALL BE ACHIEVED WITH COMPACTED, SUITABLE FILL MATERIAL PER THE SPECIFICATIONS. CONTRACTOR IS RESPONSIBLE FOR OBTAINING ALL PERMITS REQUIRED FOR DEMOLITION AND DISPOSAL.
2. THE CONTRACTOR SHALL COORDINATE WITH RESPECTIVE UTILITY COMPANIES PRIOR TO THE REMOVAL AND/OR RELOCATION OF UTILITIES.
3. THE LOCATIONS OF EXISTING UTILITIES SHOWN ON THIS PLAN HAVE BEEN DETERMINED FROM THE BEST INFORMATION AVAILABLE AND ARE GIVEN FOR THE CONVENIENCE OF THE CONTRACTOR. THE ENGINEER ASSUMES NO RESPONSIBILITY FOR THEIR ACCURACY. PRIOR TO THE START OF ANY DEMOLITION ACTIVITY, THE CONTRACTOR SHALL NOTIFY THE UTILITY COMPANIES FOR ON-SITE LOCATIONS OF EXISTING UTILITIES.
4. EXISTING STORM DRAINS, PIPING AND UTILITIES SHOWN ARE NOT TO BE INTERPRETED AS THE EXACT LOCATION, OR AS THE ONLY OBSTACLES THAT MAY BE ENCOUNTERED ON THE SITE. VERIFY EXISTING CONDITIONS AND PROCEED WITH CAUTION AROUND ANY ANTICIPATED FEATURES.
5. ELECTRICAL, TELEPHONE, CABLE TV, WATER, SEWER, FIBER OPTIC AND/OR NATURAL GAS LINES, WHICH ARE REQUIRED TO BE REMOVED OR RELOCATED, SHALL BE COORDINATED WITH THE AFFECTED UTILITY COMPANY. ADEQUATE TIME SHALL BE ALLOCATED FOR RELOCATION AND CLOSE COORDINATION WITH THE UTILITY COMPANY TO RESULT IN A SMOOTH TRANSITION IN UTILITY SERVICE.
6. SHOULD REMOVAL AND/OR RELOCATION ACTIVITIES DAMAGE EXISTING IMPROVEMENTS WHICH ARE TO REMAIN IN ANY WAY, THE CONTRACTOR SHALL CONSTRUCT AND/OR PROVIDE NEW MATERIALS/STRUCTURES IN ACCORDANCE WITH THE CONTRACT DOCUMENTS. EXCEPT FOR MATERIALS DESIGNED TO BE RELOCATED ON THIS PLAN, ALL OTHER CONSTRUCTION MATERIALS SHALL BE NEW AND UNUSED.
7. ANY IMPROVEMENTS AND/OR OBSTRUCTIONS NOT INDICATED HEREON THAT MAY FALL WITHIN THE PROPOSED CONSTRUCTION AREAS AND HINDER CONSTRUCTION SHALL BE REMOVED AND/OR RELOCATED BY THE CONTRACTOR AT NO ADDITIONAL EXPENSE TO THE OWNER. IT IS RECOMMENDED THAT THE CONTRACTOR VERIFY EXISTING FIELD CONDITIONS IN RELATION TO THESE DEMOLITION PLANS AND REPORT ANY GROSS INCONSISTENCIES OR OMISSIONS TO THE ENGINEER.
8. ALL QUANTITIES NOTED HEREON ARE FOR GENERAL INFORMATION ONLY. CONTRACTOR SHALL DEVELOP INDEPENDENT TAKEOFF BASED ON AVAILABLE PLAN DATA AND SITE VISITS.

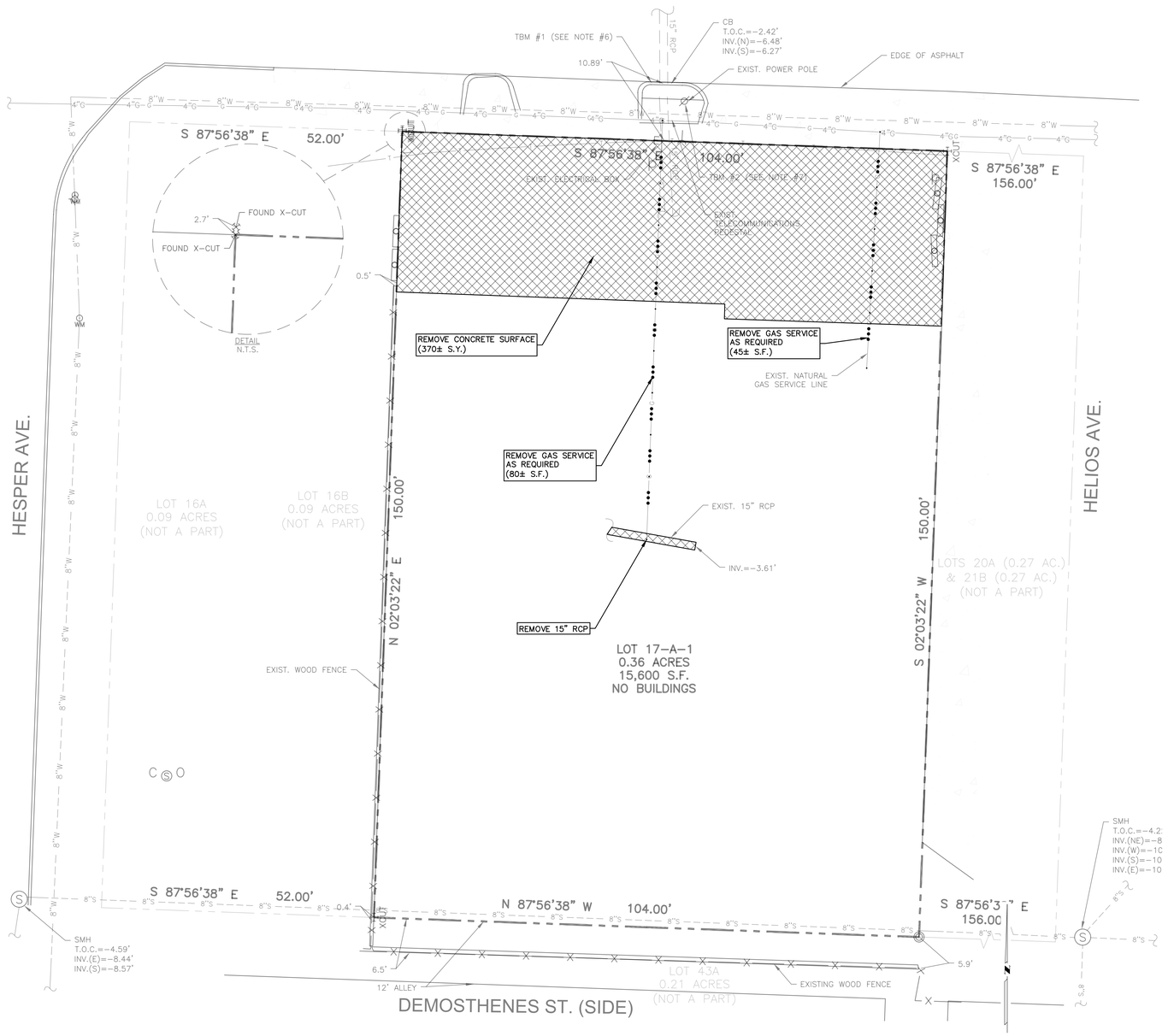

1 DEMOLITION PLAN
SCALE: 1"=10'

PAN AMERICAN ENGINEERS, LLC.
1717 JACKSON STREET (71301)
P.O. BOX 8888 (71358)
ALEXANDRIA, LOUISIANA 71308
PAE Job No. 12617

ASHE | BROUSSARD | WEINZETTLE ARCHITECTS

This drawing and design are the property of Ashe Broussard Weinzettle Architects. They are submitted on the condition that they are not to be used, reproduced, or copied, in whole or in part, or used for furnishing information to others, without the prior written consent of Ashe Broussard Weinzettle Architects. All common law rights of copyright and otherwise are hereby specifically reserved.

STATE OF LOUISIANA
Thomas C. David, Jr.
REG. No. 18878
REGISTERED PROFESSIONAL ENGINEER IN CIVIL ENGINEERING
6/7/23

REVISIONS

revision	description	date
	-	-
	-	-

RED RIVER BANK

1918 Veterans Boulevard
Metairie, Louisiana 70005

project no.	2021.53
drawn	PAE
checked	PAE
project date	May 2023
drawing no.	C1

sheet contents: DEMOLITION PLAN

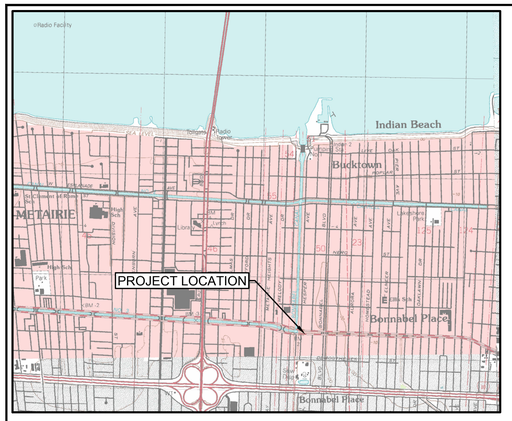

6 VICINITY MAP
N.T.S.

RECEIVING STREAM
THE RECEIVING STREAM FOR THIS PROJECT IS BAYOU CONTRABAND

ACREAGE SUMMARY in ACRES	
SEEDED/LANDSCAPED AREA	0.10 AC±
PAVED AREA	0.27 AC±
TOTAL DISTURBED	0.37 AC±

5 LEGEND

- LIMITS OF DISTURBANCE
- INDICATES DIRECTION OF RUNOFF FLOW
- EXISTING CONCRETE PAVEMENT (TO REMAIN UNDISTURBED)
- SEEDED AREAS

4 WORK ITEM KEY

- A — SILT FENCE (RE: 1/C4)
- B — STRAW BALE DAM (RE: 3/C4)
- C — SEEDING
- D — SILT FENCE INLET PROTECTION (RE: 5/C4)
- E — STRAW WATTLE (RE: 4/C4)

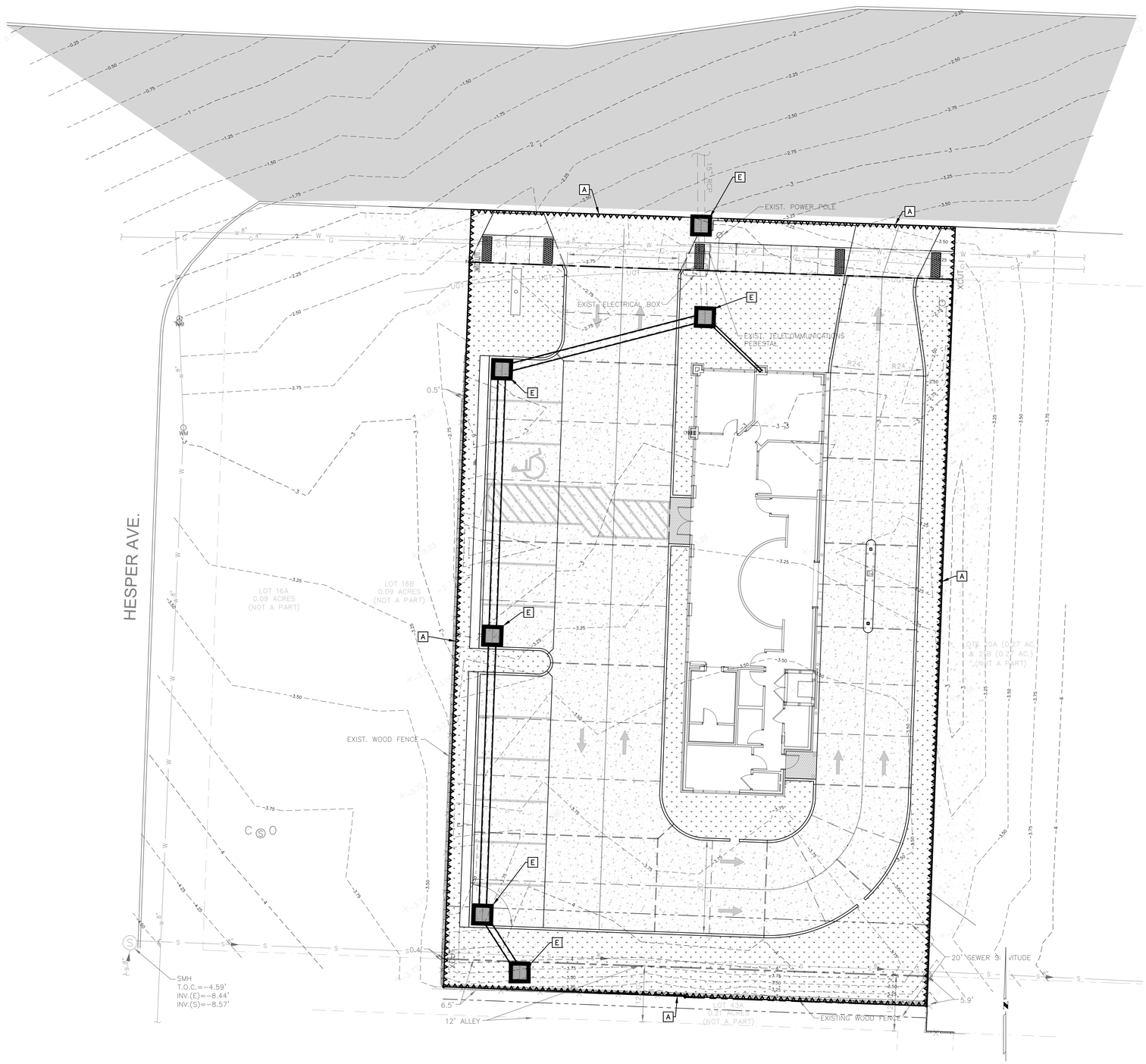

1 STORM WATER POLLUTION PREVENTION PLAN
SCALE: 1"=10'

BAR SCALE NOT INTENDED FOR CRITICAL DIMENSIONS (10 0 10 20 30 Feet)

2 GENERAL NOTES

A. CONTRACTORS AND SUBCONTRACTORS INVOLVED WITH STORM WATER POLLUTION PREVENTION SHALL OBTAIN A COPY OF THE STORM WATER POLLUTION PREVENTION PLAN AND THE NATIONAL POLLUTANT DISCHARGE ELIMINATION SYSTEM GENERAL PERMIT (NPDES GENERAL PERMIT) AND BECOME FAMILIAR WITH THEIR CONTENTS. IN THE CASE THAT THE NPDES GENERAL PERMIT REQUIREMENTS CONFLICT WITH ANY REQUIREMENTS SHOWN HEREON, THE NPDES GENERAL PERMIT SHALL TAKE PRECEDENCE AND BE FOLLOWED.

B. THE TEMPORARY PARKING AND STORAGE AREA SHALL ALSO BE USED AS THE EQUIPMENT MAINTENANCE AREA, EQUIPMENT CLEANING AREA, EMPLOYEE BREAK AREA, AND AREA FOR LOCATING PORTABLE FACILITIES, OFFICE TRAILERS, AND TOILET FACILITIES. THE EXACT LOCATIONS SHALL BE COORDINATED WITH THE OWNER'S CONSTRUCTION MANAGER.

C. WASH WATER (CONCRETE TRUCKS, VEHICLE CLEANING, EQUIPMENT CLEANING, ETC.) SHALL BE DISPOSED OF IN A MANNER THAT PREVENTS CONTACT BETWEEN THESE MATERIALS AND STORM WATER THAT IS DISCHARGED FROM THE SITE.

D. MAINTAIN ON THE SITE OR HAVE READILY AVAILABLE SUFFICIENT OIL AND GREASE ABSORBING MATERIALS AND FLOTATION BOOMS TO CONTAIN AND CLEAN-UP FUEL OR CHEMICAL SPILLS AND LEAKS.

E. DUST ON THE SITE SHALL BE CONTROLLED BY SPRAYING WATER ON DRY AREAS OF THE SITE. THE USE OF MOTOR OILS AND OTHER PETROLEUM BASED OR TOXIC LIQUIDS FOR DUST SUPPRESSION OPERATIONS IS PROHIBITED.

F. NO RUBBISH, TRASH, GARBAGE, OR OTHER SUCH MATERIALS SHALL BE ALLOWED TO DISCHARGED INTO DRAINAGE DITCHES OR WATERS OF THE STATE.

G. STORM WATER POLLUTION PREVENTION MEASURES PRESENTED ON THIS PLAN, AND IN THE STORM WATER POLLUTION PREVENTION PLAN, SHALL BE INITIATED AS SOON AS PRACTICABLE.

H. DISTURBED PORTIONS OF THE SITE WHERE CONSTRUCTION ACTIVITY WILL BE STOPPED FOR AT LEAST 21 DAYS, SHALL BE TEMPORARILY SEEDED WITHIN 14 DAYS.

I. DISTURBED PORTIONS OF THE SITE WHERE CONSTRUCTION ACTIVITY HAS PERMANENTLY STOPPED SHALL BE PERMANENTLY SEEDED. THESE AREAS SHALL BE SEEDED NO LATER THAN 14 DAYS AFTER THE LAST CONSTRUCTION ACTIVITY OCCURRING IN THESE AREAS.

J. IF THE ACTION OF VEHICLES TRAVELING OVER THE GRAVEL CONSTRUCTION ENTRANCES IS NOT SUFFICIENT TO REMOVE THE MAJORITY OF DIRT OR MUD, THEN THE TIRES MUST BE WASHED BEFORE THE VEHICLES ENTER A PUBLIC ROAD. IF WASHING IS USED, PROVISIONS MUST BE MADE TO INTERCEPT THE WASH WATER AND TRAP THE SEDIMENT BEFORE IT IS CARRIED OFF THE SITE. THE EXACT LOCATIONS SHALL BE COORDINATED WITH THE OWNER'S CONSTRUCTION MANAGER.

K. MATERIALS SPILLED, DROPPED, WASHED, OR TRACKED FROM VEHICLES ONTO ROADWAYS OR INTO STORM DRAINS MUST BE REMOVED IMMEDIATELY.

L. CONSTRUCT SILT FENCES, SILT DIKES, OR OTHER PHYSICAL BARRIERS AS NECESSARY AROUND DISTURBED AREAS TO CONTROL EROSION AND SILTATION.

M. IF SOIL STOCKPILING IS EMPLOYED ON THE SITE, SILT FENCES SHALL BE USED TO CONTAIN THE SEDIMENT.

N. SLOPES AND AREAS DISTURBED BY CONSTRUCTION SHALL BE GRADED SMOOTH AND 4" OF TOPSOIL APPLIED. IF ADEQUATE TOPSOIL IS NOT AVAILABLE ON SITE, THEN PROVIDE TOPSOIL, AS NEEDED. THE AREA SHALL THEN BE SEEDED, FERTILIZED, MULCHED, WATERED AND MAINTAINED UNTIL GRASS GROWTH IS ESTABLISHED IN ALL AREAS. ANY AREAS DISTURBED FOR ANY REASON PRIOR TO FINAL ACCEPTANCE OF THE PROJECT SHALL BE CORRECTED BY THE CONTRACTOR AT NO ADDITIONAL COST TO THE OWNER.

O. TEMPORARY EROSION AND SEDIMENT CONTROL MEASURES SHALL BE DISPOSED OF WITHIN 30 DAYS AFTER FINAL STABILIZATION. FINAL STABILIZATION HAS OCCURRED WHEN ALL SOIL DISTURBING ACTIVITIES ARE COMPLETED AND A UNIFORM PERENNIAL VEGETATIVE COVER WITH A DENSITY OF 70% OF THE COVER FOR UNPAVED AREAS AND AREAS NOT COVERED BY PERMANENT STRUCTURES HAS BEEN EMPLOYED.

P. THE CONTRACTOR IS RESPONSIBLE FOR ADJUSTING THE EROSION CONTROL MEASURES (SILT FENCES, INLET PROTECTION, ETC.) AS NECESSARY DURING CONSTRUCTION TO HELP PREVENT EROSION AND STORM WATER POLLUTION.

Q. OFF-SITE CONSTRUCTION, IF PERFORMED, SHALL BE STABILIZED AT THE END OF EACH WORKING DAY. THIS INCLUDES BACKFILLING OF TRENCHES FOR STORM DRAINS & UTILITY CONSTRUCTION, ETC.

3 NATURE OF ACTIVITY / CONSTRUCTION SEQUENCE

THIS PROJECT GENERALLY INCLUDES, BUT IS NOT LIMITED TO, THE FOLLOWING CIVIL SITE WORK AND RELATED APPURTENANCES:

1. INSTALLATION OF STORM WATER POLLUTION PREVENTION PLAN BEST MANAGEMENT PRACTICES.
2. DEMOLITION/REMOVAL OF VARIOUS PAVEMENT/BASE, CURBS, CURB AND GUTTER, WALKS, STORM DRAINS, UTILITES, LANDSCAPING, ETC. TO FACILITATE CONSTRUCTION OF THE PROJECT.
3. REMOVAL OF ABANDONED UTILITIES AND ELECTRICAL CONDUITS AND WIRING.
4. INSTALLATION OF EXCAVATION AND EMBANKMENT AND ELECTRICAL UTILITIES FOR ROADWAY CONSTRUCTION.
5. INSTALLATION OF NEW STORM DRAINAGE PIPE AND STRUCTURES.
6. INSTALLATION OF ROADWAY PAVEMENT AND UTILITES.
7. INSTALLATION OF STRIPING ON NEW PAVEMENT AREAS.
8. STABILIZATION OF DISTURBED UNPAVED AREAS.
9. REMOVE TEMPORARY STRUCTURAL CONTROLS.

PAN AMERICAN ENGINEERS, LLC.
1717 JACKSON STREET (71301)
P.O. BOX 8899 (71306)
ALEXANDRIA, LOUISIANA 71306 PAE Job No. 12617

ASHE | BROUSSARD | WEINZETTLE ARCHITECTS

This drawing and design are the property of Ashe Broussard Weinzettle Architects. They are submitted on the condition that they are not to be used, reproduced, or copied, in whole or in part, or used for furnishing information to others, without the prior written consent of Ashe Broussard Weinzettle Architects. All common law rights of copyright and otherwise are hereby specifically reserved.

STATE OF LOUISIANA
Thomas C. David, Jr.
REG. No. 18878
PRELIMINARY PRINTED
PROFESSIONAL ENGINEER
IN
6/7/23
CIVIL ENGINEERING

REVISIONS

revision	description	date
	-	-
	-	-
	-	-

RED RIVER BANK

1918 Veterans Boulevard
Metairie, Louisiana 70005

project no.	2021.53
drawn	PAE
checked	PAE
project date	May 2023
sheet contents	STORM WATER POLLUTION PREVENTION PLAN
drawing no.	C2

NOTES:
1. AREA STEEL CALCULATED WITH ENGINEERED MAT & REBAR DESIGNED TO MEET REQUIRED AREA OF STEEL. ALL GRADE 60 MINIMUM.
2. AREA OF STEEL APPLIES TO BOTH DIRECTIONS & AT ALL LOCATIONS.
3. CLASS 1 CONCRETE WITH DESIGN STRENGTH OF 5000 PSI AT 28 DAYS.
4. PIPE TO BE GROUTED IN BY CONTRACTOR AFTER INSTALLATION.

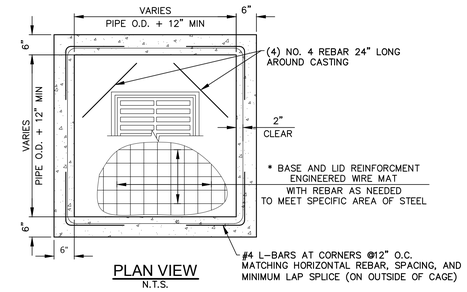

PLAN VIEW
N.T.S.

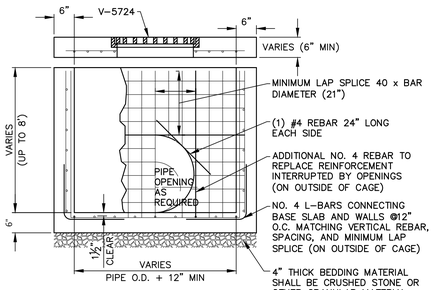

FRONT VIEW
N.T.S.

9 24" SINGLE GRATE INLET
N.T.S.

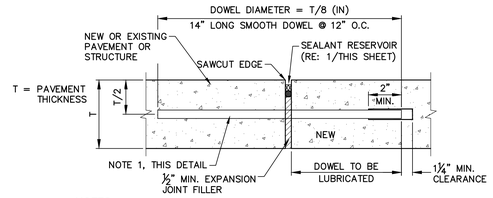

NOTES:
1. STAR DRILLING AND EPOXY ANCHORING OF SMOOTH DOWELS REQUIRED INTO EXISTING CONCRETE PAVEMENT (7" EMBEDMENT)..

8 ISOLATION JOINT
N.T.S.

7 DRAINAGE STRUCTURE NOTES
1. PRECAST CONCRETE CATCH BASINS SHALL BE UTILIZED ON THIS PROJECT. THE PRECAST CONCRETE CATCH BASINS SHALL MEET THE REQUIREMENTS OF SECTIONS 702 AND 1016 OF LOUISIANA STANDARD SPECIFICATIONS FOR ROADS AND BRIDGES, 2006 EDITION3. C.B.'S WITH MASONRY WALLS SHALL BE GROUTED 1/2" ON THE INSIDE AND OUTSIDE.
2. THE BOTTOMS OF CATCH BASINS SHALL CONTAIN BENCHES AND THEY SHALL BE CONSTRUCTED TO ALLOW SMOOTH FLOW THROUGH THE SYSTEM. GROUT SHALL EXTEND TO A HEIGHT OF 6" FOR 15" AND 18" DIA. PIPE AND A HEIGHT OF 1/3 DIA. OF PIPE FOR 24" DIA. PIPE AND LARGER AT OUTSIDE EDGES AND SHALL SLOPE TO THE INVERT OF THE CATCH BASIN
4. THE OUTSIDE CROWN OF PIPE ENTERING OR LEAVING A CATCH BASIN SHALL BE BELOW THE ELEVATION OF THE BOTTOM OF FRAME.
5. RINGS AND COVERS, FRAMES AND GRATES SHALL BE DELIVERED UNPAINTED AND AFTER INSTALLATION SHALL BE CLEANED OF SILT, DEBRIS OR OTHER FOREIGN MATTER AND COATED WITH ASPHALTIC VARNISH IN ACCORDANCE WITH SECTIONS 702.04 AND 1008.03 OF LOUISIANA STANDARD SPECIFICATIONS FOR ROADS AND BRIDGES, 2006 EDITION.
6. CATCH BASINS SHOWN SHALL HAVE AN INSIDE DIMENSION OF NO LESS THAN 4' SQUARE IF OVER 4'-0" DEEP.

6 "NOTICE TO CONTRACTOR"
- IF CONTRACTOR DOES NOT ACCEPT EXISTING TOPOGRAPHY AS SHOWN ON THE PLANS, WITHOUT EXCEPTION, HE SHALL HAVE MADE, AT HIS EXPENSE, A TOPOGRAPHIC SURVEY BY A REGISTERED LAND SURVEYOR AND SUBMIT IT TO THE OWNER FOR REVIEW. THE CONTRACTOR IS RESPONSIBLE FOR VERIFYING HORIZONTAL AND VERTICAL LOCATION OF ALL EXISTING STORM DRAINAGE STRUCTURES, PIPES, AND ALL UTILITIES PRIOR TO CONSTRUCTION AND NOTIFY THE OWNER OF ANY DISCREPANCIES FROM THE INFORMATION SHOWN ON THE PLANS. ANY ADDITIONAL COST INCURRED DUE TO NON-VERIFICATION OF THESE EXISTING ITEMS SHALL BE AT THE CONTRACTOR'S EXPENSE.
- THE PRESENCE OF GROUNDWATER SHOULD BE ANTICIPATED ON THIS PROJECT. CONTRACTOR'S BID SHALL INCLUDE CONSIDERATION FOR ADDRESSING THIS ISSUE.

5 "CAUTION - NOTICE TO CONTRACTOR"
THE CONTRACTOR IS SPECIFICALLY CAUTIONED THAT THE LOCATION AND/OR ELEVATION OF EXISTING UTILITIES AS SHOWN ON THESE PLANS ARE BASED ON RECORDS OF THE VARIOUS UTILITY COMPANIES AND, WHERE POSSIBLE, MEASUREMENTS TAKEN IN THE FIELD. THE INFORMATION IS NOT TO BE RELIED UPON AS BEING EXACT OR COMPLETE. THE CONTRACTOR MUST CALL THE APPROPRIATE UTILITY COMPANY AT LEAST 48 HOURS BEFORE ANY EXCAVATION TO REQUEST EXACT FIELD LOCATION OF UTILITIES. THE CONTRACTOR SHOULD EXERCISE CAUTION WHEN EXCAVATING IN THE VICINITY OF MARKED UTILITIES. MARKED AND/OR UNMARKED UTILITIES WHICH WOULD REQUIRE RELOCATION DUE TO THE SPECIFIED PROJECT SCOPE, AND NOT CALLED OUT ON PLANS FOR RELOCATION/ADJUSTMENT, SHALL BE PERFORMED AT AN ADDITIONAL COST NEGOTIATED WITH THE OWNER. MARKED UTILITIES WHICH DO NOT REQUIRE RELOCATION BUT ARE DAMAGED BY THE CONTRACTOR SHALL BE REPAIRED AT THE CONTRACTOR'S EXPENSE.

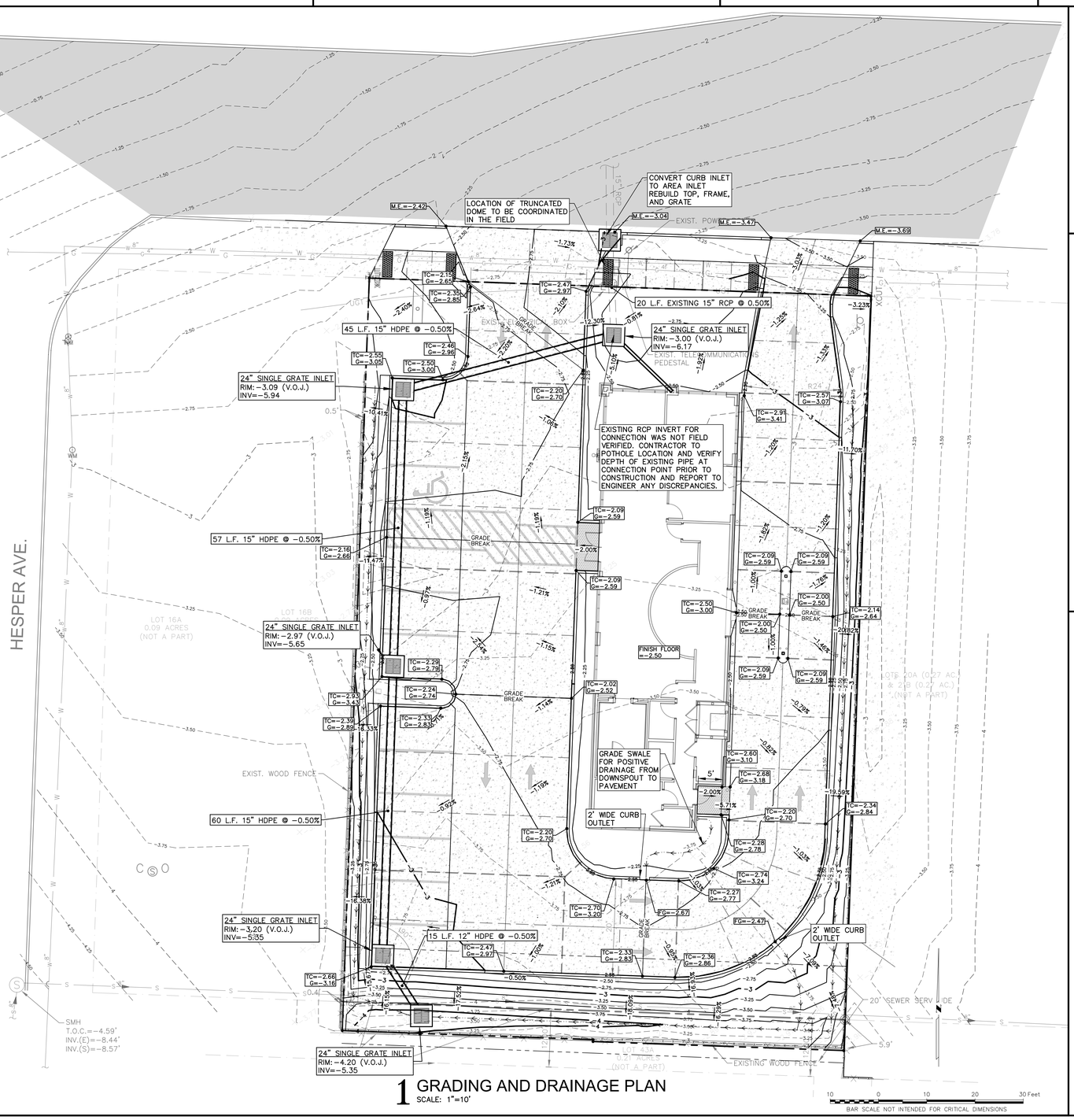

1 GRADING AND DRAINAGE PLAN
SCALE: 1"=10'

2 LEGEND
- TC=125.57 / G=125.07 — TC = TOP OF CURB ELEVATION; G = GUTTER ELEVATION
- FG=125.07 — FINISHED GRADE ELEVATION
- M.E. 125.57± — MATCH EXISTING ELEVATION
- 125 — EXISTING GROUND CONTOURS
- 125 — PROPOSED FINISHED CONTOURS
- DRAINAGE FLOW DIRECTION
- GRADED SHALLOW SWALE
- SAWCUT (RE: ARCH)

3 GENERAL NOTES
1) IN ALL AREAS EXCEPT WHERE DELINEATED OTHERWISE ON THIS SHEET, CONTRACTOR SHALL CLEAR, GRUB AND STRIP SITE OF EXISTING VEGETATION AND REMOVE EXISTING UNSUITABLE SOIL/AGGREGATE MATERIAL.
2) IF THE CONTRACTOR RELOCATES A BENCHMARK WITH A NEW BENCHMARK, IT SHALL BE RELOCATED WITHIN A TOLERANCE OF 0.010'.
3) CONSTRUCTION SHALL COMPLY WITH ALL GOVERNING CODES.
4) GRADED AREAS NOT PAVED SHALL RECEIVE FOUR INCHES (4") OF TOPSOIL AND TO BE HYDRO-SEEDED (AND HAVE EROSION CONTROL BLANKETS INSTALLED WHERE SHOWN) AND/OR SODDED IN ACCORDANCE WITH THE EROSION CONTROL PLAN AND SITEWORK SPECIFICATIONS.
5) THE MAXIMUM SLOPE FOR UNPAVED AREAS SHALL BE 5:1 UNLESS OTHERWISE NOTED.
6) EXISTING GRADE CONTOURS SHOWN AT ONE QUARTER FOOT (1/4') INTERVALS
7) FINISHED GRADE CONTOURS SHOWN AT ONE QUARTER FOOT (1/4') INTERVALS.
8) CLEARING AND GRUBBING LIMITS SHALL INCLUDE ALL AREAS DISTURBED BY GRADING OPERATIONS. CONTRACTOR IS RESPONSIBLE FOR THE PROTECTION OF ALL AREAS (AND TREES) DELINEATED FOR PRESERVATION, ALL PROPERTY CORNERS, AND REPLACING ALL PINS ELIMINATED OR DAMAGED DURING CONSTRUCTION.
9) CONTRACTOR IS RESPONSIBLE FOR SECURING TEMPORARY STOCKPILE SITE FOR TOPSOIL AND FOR RETAINING AN ADEQUATE QUANTITY OF TOPSOIL MATERIAL FOR THE FINAL GRADING AND PLANTING REQUIREMENTS.
10) ALL AREAS DISTURBED BY CONSTRUCTION AND NOT PLANNED FOR PAVEMENT SHALL BE GRADED TO ENSURE POSITIVE DRAINAGE.

4 WET WEATHER MANAGEMENT
FINE-GRAINED SOILS ARE EXPECTED TO BE RELATIVELY SENSITIVE TO DISTURBANCES CAUSED BY CONSTRUCTION TRAFFIC, CONSISTENT CONSTRUCTION EQUIPMENT PATHS AND TO CHANGES IN MOISTURE CONTENT. THE SOIL IN SOME AREAS OF THE PROJECT SITE MAY CREATE DIFFICULT WORKING CONDITIONS DURING WET WEATHER. RATHER THAN WORK WITH THESE MATERIALS, IT MAY BE DESIRABLE TO REMOVE THESE SOILS AND REPLACE TO DESIRED GRADE USING ADDITIONAL SUITABLE FILL. INCREASES IN THE MOISTURE CONTENT OF THE SOIL CAN CAUSE SIGNIFICANT REDUCTION IN THE SOIL STRENGTH AND SUPPORT CHARACTERISTICS. IN ADDITION, FINE-GRAINED SOIL THAT BECOMES WET MAY BE SLOW TO DRY AND THUS SIGNIFICANTLY RETARD THE PROGRESS OF GRADING AND COMPACTION ACTIVITIES. IT WILL, THEREFORE, BE ADVANTAGEOUS TO PERFORM EARTHWORK AND FOUNDATION CONSTRUCTION ACTIVITIES DURING DRY WEATHER.

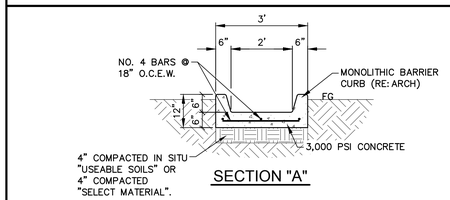

SECTION "A"

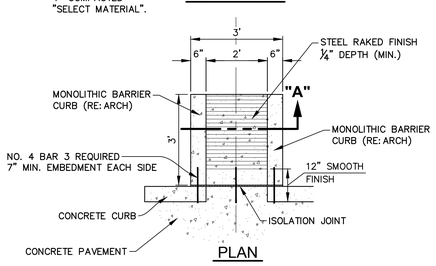

PLAN

10 CURB OUTLET
N.T.S.

NOTES:
1. REFER TO SECTION 02220 OF THE SITEWORK SPECIFICATIONS FOR REQUIREMENTS ON TRENCH EXCAVATION.
2. BEDDING (LOUISIANA STANDARD SPECIFICATIONS FOR ROADS AND BRIDGES-2006 EDITION, SECTION 1003.08) COMPACTED TO 95% STANDARD PROCTOR AT ±3% OPTIMUM MOISTURE CONTENT (ASTM D698) AND SHALL BE SHAPED TO THE BOTTOM OF THE PIPE.
3. HAUNCHING AND INITIAL BACKFILL MATERIAL FOR FLEXIBLE PIPE SHALL BE CLASS I OR II GRANULAR (REF. ASTM D2321) SHALL HAVE A VOID RATIO EQUAL TO OR LESS THAN THAT OF THE BEDDING MATERIALS AND SHALL BE COMPACTED TO 95% STANDARD PROCTOR AT ±3% OPTIMUM MOISTURE CONTENT (ASTM D698).
4. BEDDING, HAUNCHING, INITIAL BACKFILL AND SELECT FILL SHALL BE IN ACCORDANCE WITH THE PIPE MANUFACTURER'S RECOMMENDATIONS.
5. SELECT FILL MATERIAL SHALL BE FREE OF ORGANIC OR OTHER DELETERIOUS MATERIALS, HAVE A MAXIMUM PARTICLE SIZE OF LESS THAN 3" AND HAVE A MAXIMUM LIQUID LIMIT OF 40, A PLASTICITY INDEX BETWEEN 8 AND 20, AND LESS THAN 60% PASSING THE NO. 200 SIEVE.
6. SELECT FILL SHALL BE PLACED IN 8" MAX. LOOSE LIFTS AND COMPACTED TO 95% STANDARD PROCTOR AT -1% TO +3% OPTIMUM MOISTURE CONTENT (ASTM D698).

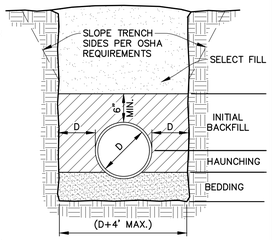

FLEXIBLE PIPE

11 STORM DRAIN TRENCH AND BEDDING DETAILS
N.T.S.

PAN AMERICAN ENGINEERS, LLC.
1717 JACKSON STREET (71301)
P.O. BOX 8888 (71306)
ALEXANDRIA, LOUISIANA 71306
PAE Job No. 12617

ASHE | BROUSSARD | WEINZETTLE ARCHITECTS

This drawing and design are the property of Ashe Broussard Weinzettle Architects. They are submitted on the condition that they are not to be used, reproduced, or copied, in whole or in part, or used for furnishing information to others, without the prior written consent of Ashe Broussard Weinzettle Architects. All common law rights of copyright and otherwise are hereby specifically reserved.

STATE OF LOUISIANA
Thomas C. David, Jr.
REG. No. 18878
REGISTERED PROFESSIONAL ENGINEER IN CIVIL ENGINEERING
6/1/23

REVISIONS

revision	description	date
	-	-
	-	-

RED RIVER BANK
1918 Veterans Boulevard
Metairie, Louisiana 70005

project no	2021.53
drawn	PAE
checked	PAE
project date	May 2023
drawing no.	C3

sheet contents: GRADING AND DRAINAGE PLAN

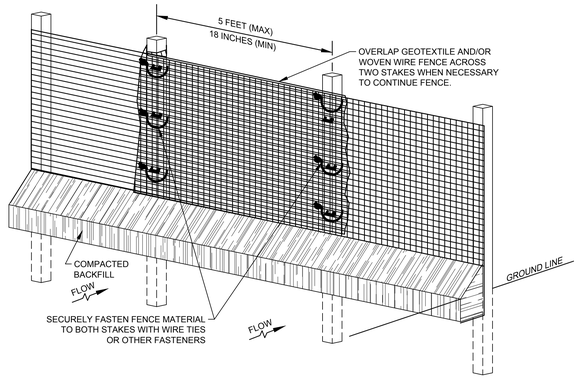

2 OVERLAP OF SEDIMENTATION/SILT FENCE
N.T.S.

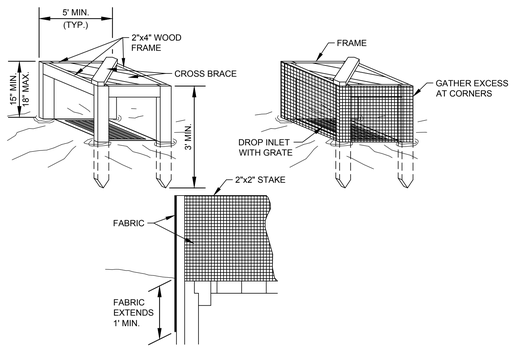

5 SILT FENCE INLET PROTECTION
N.T.S.

NOTES:

1. PLACE BALES IN A SINGLE ROW, LENGTHWISE, ORIENTED PERPENDICULAR TO THE FLOW, AND WITH ENDS OF ADJACENT BALES TIGHTLY ABUTTING ONE ANOTHER.
2. EACH BALE SHALL BE EMBEDDED IN THE SOIL 4"-6". USE STRAW OR FILTER FABRIC TO FILL ANY GAPS BETWEEN THE BALES & TAMP THE BACKFILL MATERIAL TO PREVENT EROSION UNDER OR AROUND THE BALES.
   IF THE BALES ARE WIRE BOUND, THEY SHOULD BE ORIENTED SO THE BINDINGS ARE AROUND THE SIDES RATHER THAN ALONG THE TOP & BOTTOM TO PREVENT DISINTEGRATION OF WIRE.
3. THE BALES SHALL BE SECURELY ANCHORED IN PLACE BY TWO WOODEN STAKES DRIVEN THROUGH THE BALES. THE FIRST STAKE IN EACH BALE SHALL BE DRIVEN TOWARD THE PREVIOUSLY LAID BALE TO FORCE THE BALES TIGHTLY TOGETHER. DRIVE THE STAKES AT LEAST 18 INCHES INTO THE GROUND.
4. EXTEND THE BARRIER, ACROSS THE SWALE, TO SUCH A LENGTH THAT THE BOTTOMS OF THE END BALES ARE AT A HIGHER ELEVATION THAN THE TOP OF THE CENTER BALE TO ASSURE THAT SEDIMENT-LADEN RUNOFF WILL FLOW OVER THE BARRIER BUT NOT AROUND IT.
5. POINT 'A' MUST BE HIGHER THAN POINT 'B'. (SPILLWAY HEIGHT)
6. SPILLWAY HEIGHT SHALL NOT EXCEED 24".
7. THE STRAW BALE CHECK DAMS SHALL BE INSPECTED WEEKLY AND AFTER EACH RAIN, UNTIL FINAL ACCEPTANCE. REPAIRS AND/OR REPLACEMENT SHALL BE MADE PROMPTLY.
8. SEDIMENT SHALL BE REMOVED WHEN THE BARRIER IS 60% FULL. THE REMOVED SEDIMENT SHALL BE DEPOSITED IN AN AREA THAT WILL NOT CONTRIBUTE TO OFF-SITE SEDIMENT AND CAN BE PERMANENTLY STABILIZED.
9. MAINTENANCE OF THE STRAW BALE CHECK DAM.

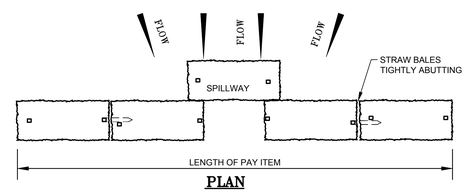

PLAN

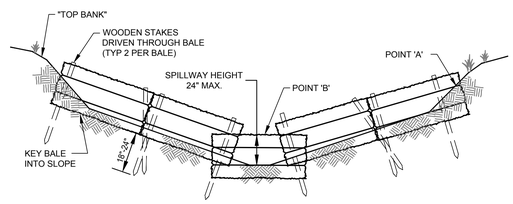

VIEW LOOKING UPSTREAM

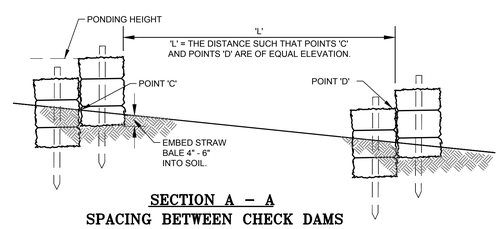

SECTION A – A
SPACING BETWEEN CHECK DAMS

3 STRAW BALE CHECK DAM
N.T.S.

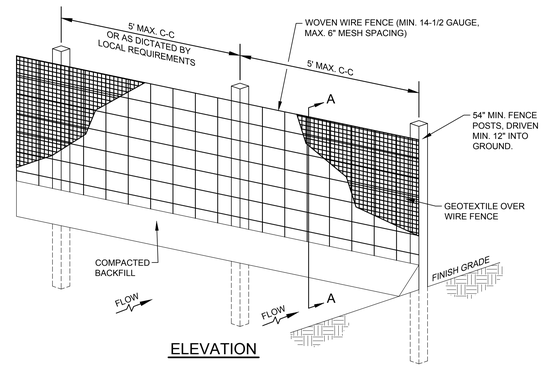

ELEVATION

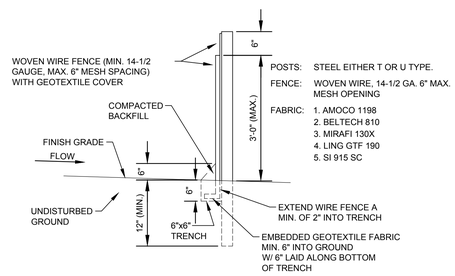

A-A-SECTION

NOTES:

1. WOVEN WIRE FENCE TO BE FASTENED SECURELY TO FENCE POSTS WITH WIRE TIES.
2. GEOTEXTILE TO BE FASTENED SECURELY TO WOVEN WIRE FENCE WITH TIES SPACED EVERY 24" AT TOP AND MID SECTION.
3. WHEN TWO SECTIONS OF GEOTEXTILE ADJOIN EACH OTHER THEY SHALL BE OVERLAPPED BY SIX INCHES AND FOLDED.
4. MAINTENANCE SHALL BE PERFORMED AS NOTED IN THE EROSION CONTROL PLAN. COLLECTED MATERIAL SHALL BE REMOVED WHEN "BULGES" DEVELOP IN THE SILT FENCE.
5. ALL SILT FENCE SHALL INCLUDE WIRE SUPPORT UNLESS INDICATED OTHERWISE

1 SEDIMENTATION/SILT AND PERIMETER FENCE WITH WIRE SUPPORT
N.T.S.

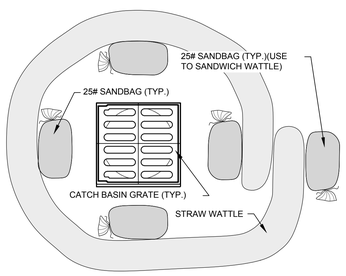

4 STRAW WATTLE INLET SEDIMENT CONTROL
N.T.S.

PAN AMERICAN ENGINEERS, LLC.
1717 JACKSON STREET (71301)
P.O. BOX 8888 (71358)
ALEXANDRIA, LOUISIANA 71308
PAE Job No. 12617

ASHE | BROUSSARD | WEINZETTLE ARCHITECTS

This drawing and design are the property of Ashe Broussard Weinzettle Architects. They are submitted on the condition that they are not to be used, reproduced, or copied, in whole or in part, or used for furnishing information to others, without the prior written consent of Ashe Broussard Weinzettle Architects. All common law rights of copyright and otherwise are hereby specifically reserved.

STATE OF LOUISIANA
Thomas C. David, Jr.
REG. No. 18878
REGISTERED PROFESSIONAL ENGINEER IN CIVIL ENGINEERING
5/1/23

REVISIONS

revision	description	date
	-	-
	-	-

RED RIVER BANK

1918 Veterans Boulevard
Metairie, Louisiana 70005

project no: 2021.53
drawn: PAE
checked: PAE
project date: May 2023

sheet contents: DETAILS

drawing no: C4

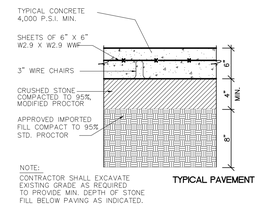

TYPICAL PAVEMENT

2 (A2.1 | A2.1) TYP. PAVING SECTION
SCALE: 1 1/2" = 1'-0"

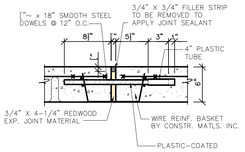

3 (A2.1 | A2.1) TYP. EXPANSION JOINT
SCALE: 1 1/2" = 1'-0"

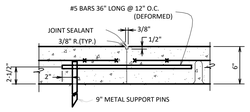

4 (A2.1 | A2.1) TYP. CONSTRUCTION JNT.
SCALE: 1 1/2" = 1'-0"

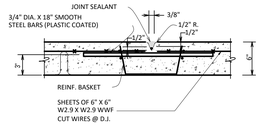

5 (A2.1 | A2.1) TYP. DUMMY JOINT
SCALE: 1 1/2" = 1'-0"

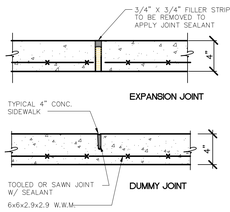

6 (A2.1 | A2.1) TYP. SIDEWALK JNT.
SCALE: 1 1/2" = 1'-0"

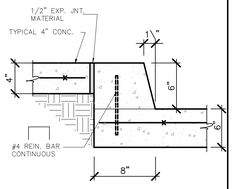

7 (A2.1 | A2.1) TYP. CURB DETAIL
SCALE: 1 1/2" = 1'-0"

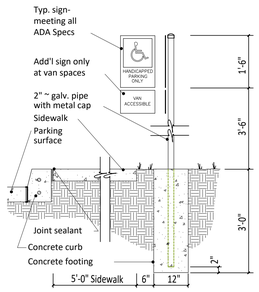

8 (A2.1 | A2.1) ACCESSIBLE PARKING SIGN
SCALE: 1 1/2" = 1'-0"

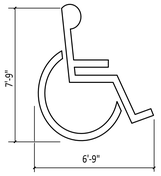

Note: Apply this symbol to all accessible parking spaces.

9 (A2.1 | A2.1) ACCESSIBLE PARK. SYM.
SCALE: None

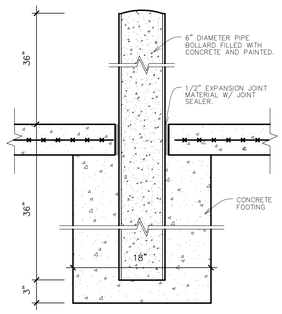

10 (A2.1 | A2.1) STEEL PARKING BOLLARD
SCALE: 1 1/2" = 1'-0"

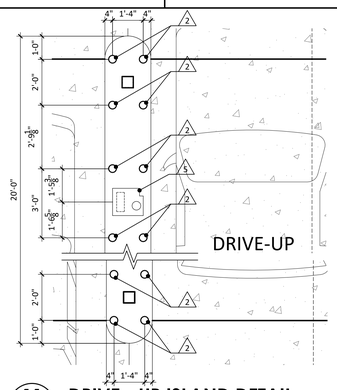

11 (A2.1 | A2.1) DRIVE - UP ISLAND DETAIL
SCALE: 1 1/2" = 1'-0"

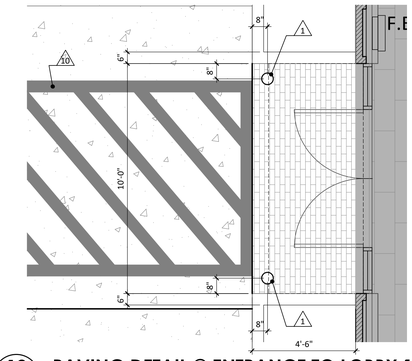

12 (A2.1 | A2.1) PAVING DETAIL @ ENTRANCE TO LOBBY 105
SCALE: 3/8" = 1'-0"

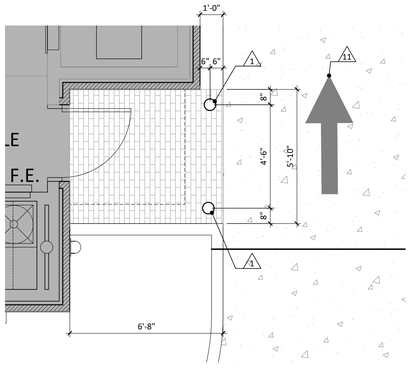

12 (A2.1 | A2.1) PAVING DETAIL @ ENTRANCE TO HALL 116
SCALE: 3/8" = 1'-0"

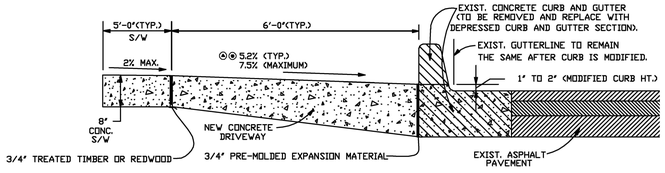

13 (A2.1 | A2.1) NEW DRIVEWAY CONNECTION TO EXISTING ASPHALT ROADWAY WITH CURB AND GUTTER
SCALE: 3/8" = 1'-0"

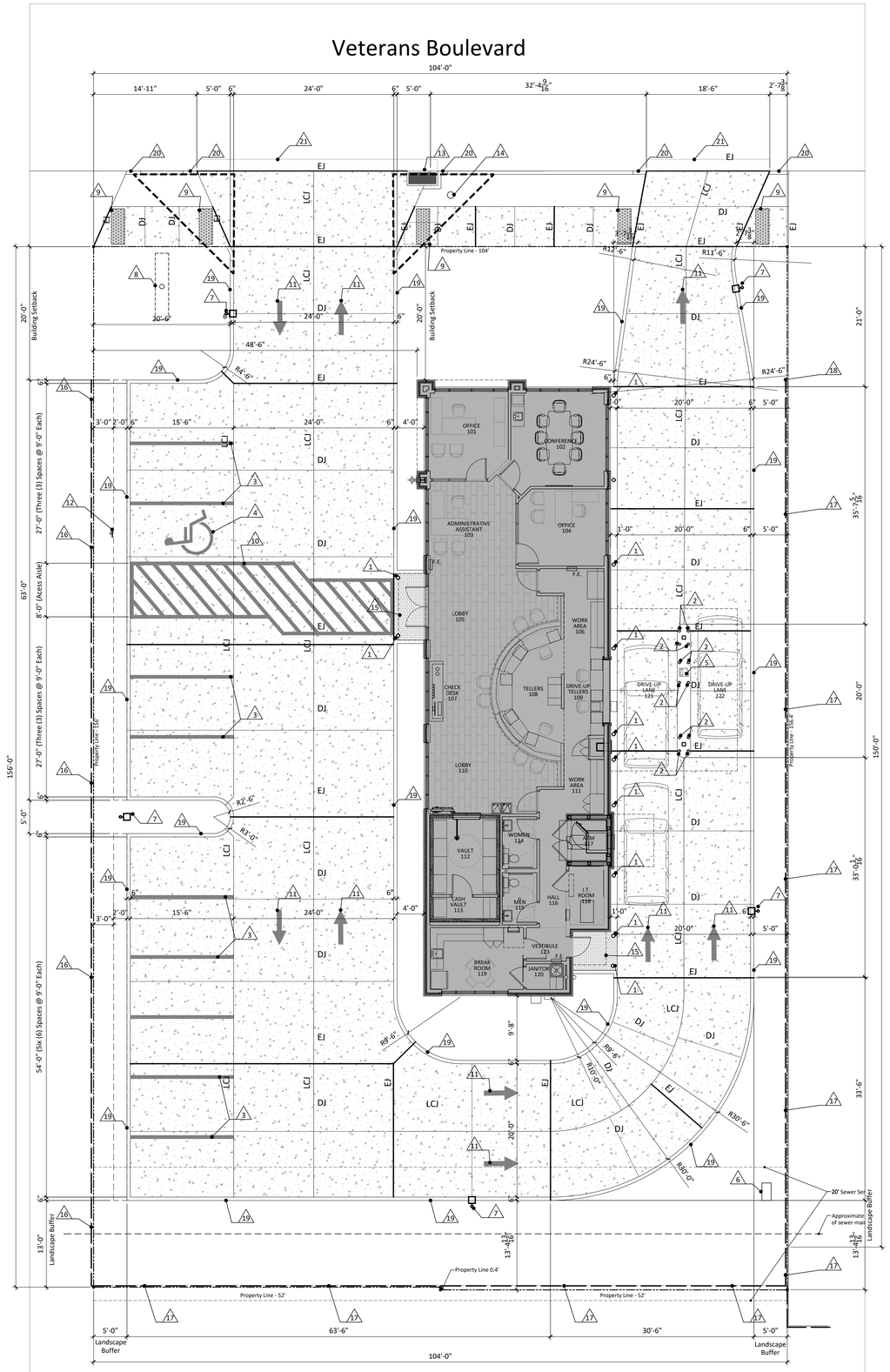

1 (A2.1) SITE PLAN
SCALE: 1/8" = 1'-0"

Note:
See Civil Plans for grading and drainage information.

GENERAL SITE NOTES

1. -Indicates concrete paving.
2. EJ -Indicates expansion joint.
3. LCJ -Indicates construcion joint.
4. DJ - Indicates dummy joint.
5. Maximum cross slope on all sidewalks shall be 1:50.
6. Maximum slope on all ramps shall be 1:12.

Note:
1. See Grading Plan for parking and paving elevations.
2. See Partial Plans for paving elevations at Entrances, Exists, and Porches.

KEYNOTES

1. 6" dia. steel pipe bollard, paint. See Detail 10/A2.1
2. 4" dia. steel pipe bollard, paint. Similar to Dtl. 10/A2.1
3. 6" parking stripe, typical
4. Accessible parking symbol, see Detail 9/A2.1
5. Remote Teller Unit (N.I.C.), See SPECIFICATION Appendix
6. Electrical pedestal, see ELECTRICAL Drawings
7. Site lighting pole, see ELECTRICAL Drawings
8. Pylon sign (N.I.C.), see ELECTRICAL for power/data
9. 24 " tactile warning strip, see SPECIFICATIONS
10. Access isle composed of 6" striping
11. Painted directional traffic arrow
12. Accessible parking sign, see Detail 8/A2.1
13. Existing curb storm drain structure to be converted to an area storm drain, see CIVIL Drawings
14. Existing utility pole
15. Brick pavers
16. Existing wood fence
17. New 7' wood fence (N.I.C.)
18. New 7' wood fence (N.I.C.) stops here
19. 6" concrete curb
20. Curb tapers from existing elevation to zero at this location
21. New driveway connection at existing curb and gutter. See Detail 13/A2.1

ASHE | BROUSSARD | WEINZETTLE ARCHITECTS

This drawing and design are the property of Ashe Broussard Weinzettle Architects. They are submitted on the condition that they are not to be used, reproduced, or copied, in whole or in part, or used for furnishing information to others, without the prior written consent of Ashe Broussard Weinzettle Architects. All common law rights of copyright and otherwise are hereby specifically reserved.

KEVIN R. BROUSSARD No. 3894 STATE OF LOUISIANA REGISTERED ARCHITECT

REVISIONS

revision	description	date
	-	-
	-	-

RED RIVER BANK

1918 Veterans Boulevard
Metairie, Louisiana 70005

project no. 2021.53
drawn KRB
checked #
project date January 2023

sheet contents: Site Plan

drawing no. A2.1

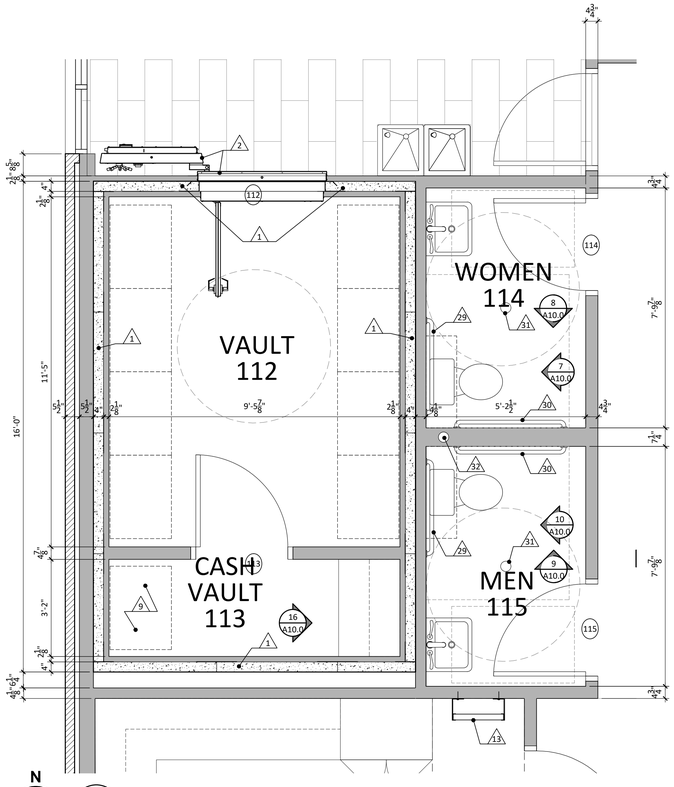

2 A3.0 A3.0 **PLAN DETAIL - VAULT 112**
SCALE: 1/2" = 1'-0"

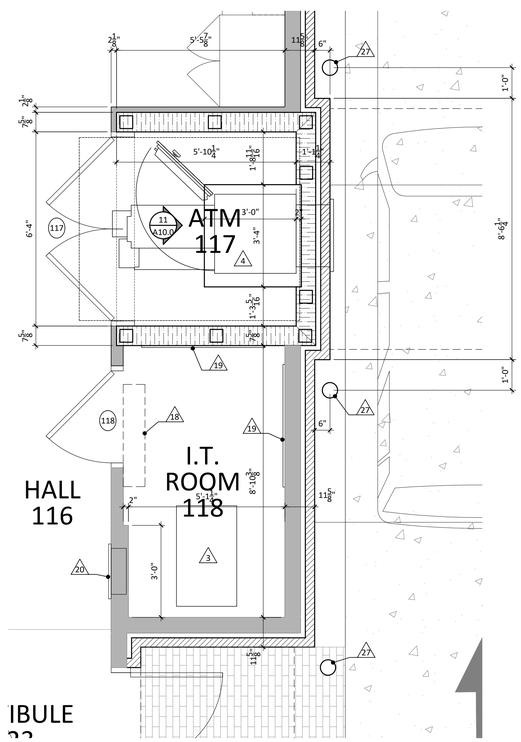

3 A3.0 A3.0 **PLAN DETAIL - ATM 117 / I.T. 118**
SCALE: 1/2" = 1'-0"

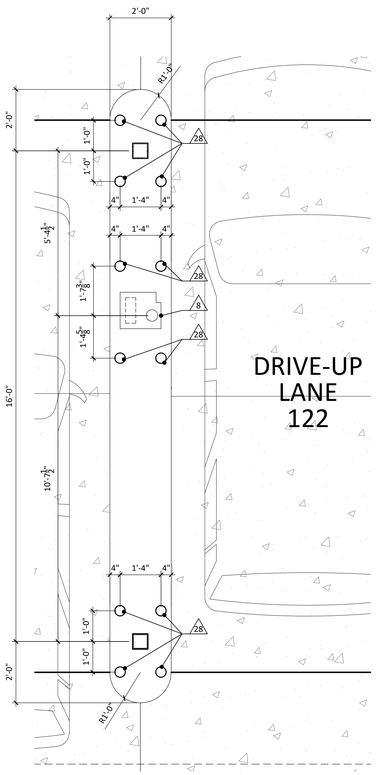

4 A3.0 A3.0 **PLAN DETAIL - DRIVE-UP 122**
SCALE: 1/2" = 1'-0"

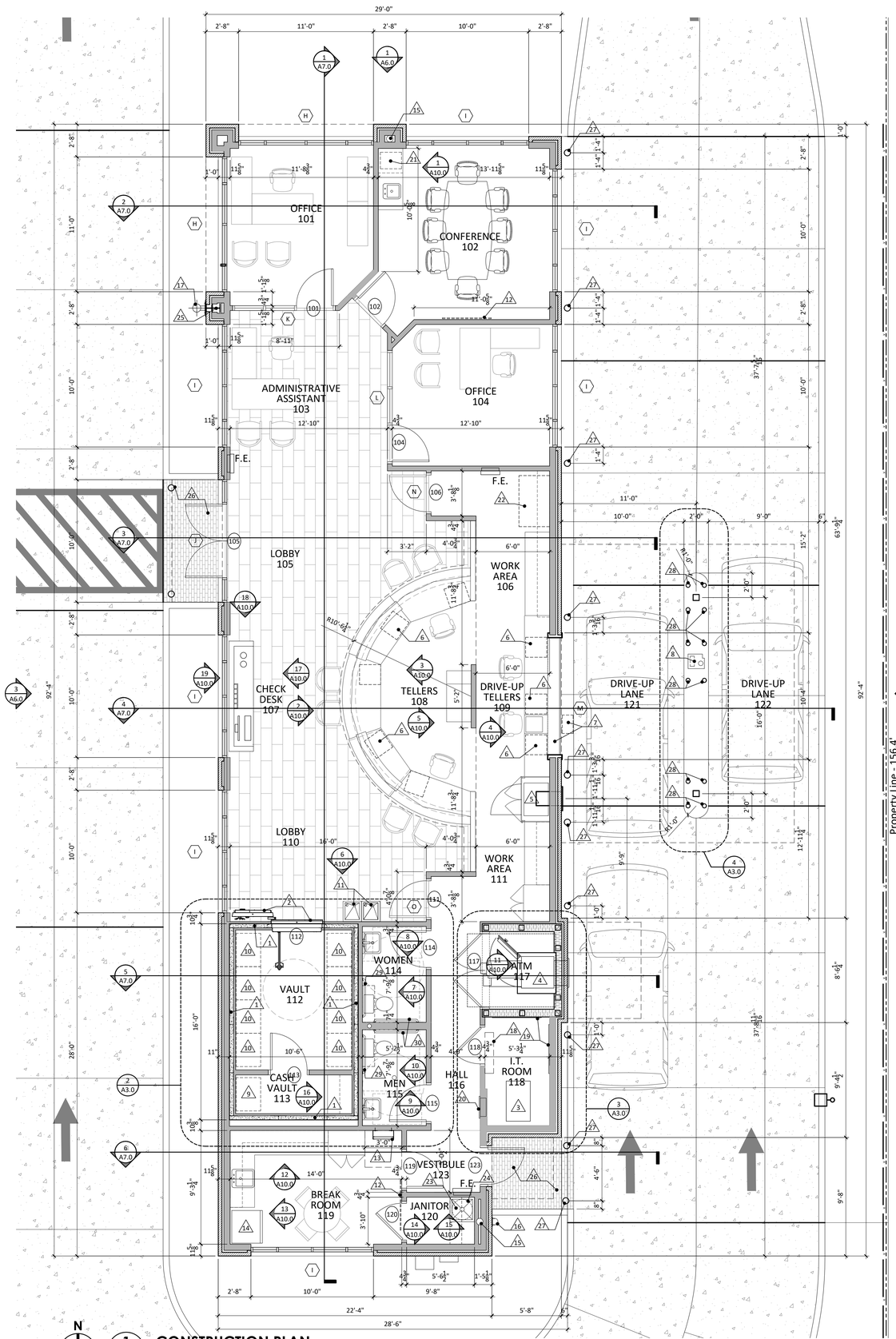

1 A3.0 A4.0 **CONSTRUCTION PLAN**
SCALE: 3/16" = 1'-0"

GENERAL NOTES

1. See General Notes on Sheet A1.0
2. F.E. - Indicates fire extinguisher in wall mounted cabinet.
3. - Indicates concrete paving.

PARTITION TYPES

1. - Indicates exterior wall construction of 4" masonry veneer, building wrap, $\frac{1}{2}$" o.s.b., 5 $\frac{1}{2}$" wood studs at 16" o.c. with 5 $\frac{1}{2}$" fiberglass batt insulation in the stud cavity, and $\frac{5}{8}$" gypsum board on the interior face of the wall. At the exterior, the masonry veneer stops at 36" above finish floor with E.I.F.S. system above. See building elevations, Sheet A6.0. At limited locations, the masonry veneer extends full height of exterior wall. See building elevations on Sheet A6.0.
2. - Indicates exterior wall construction of 4" masonry veneer, building wrap, $\frac{1}{2}$" o.s.b., 5 $\frac{1}{2}$" wood studs at 16" o.c. with 5 $\frac{1}{2}$" fiberglass batt insulation in the stud cavity, 4" concrete vault panel, 2 x 4 wood furring at 16" o.c., and $\frac{5}{8}$" gypsum board on the interior face of the wall. At the exterior, the masonry veneer stops at 36" above finish floor with E.I.F.S. system above.
3. - Indicates exterior wall construction of 4" masonry veneer, fluid-applies waterproofing, 8" reinforced C.M.U. and painted interior face. C.M.U. extends to truss bearing height. Masonry veneer extends to full height. See building elevations on Sheet A6.0.
4. - Indicates interior wall construction of 8" c.m.u. with 2x4 wood furring at 16" o.c. and $\frac{5}{8}$" gypsum sheathing on one side. Wall extends to truss bearing.
5. - Indicates interior wall construction of 2 x 4 wood studs at 16" o.c. with one layer of $\frac{5}{8}$" gypsum sheathing on each side and 3 $\frac{1}{2}$" fiberglass batt insulation in the stud cavity. Wall extends to truss bearing.
6. - Indicates 2 x 4 wood furring on 4" concrete vault panel and one layer of $\frac{5}{8}$" gypsum sheathing on each side, or as indicated.

KEYNOTES

1. Prefabricated concrete vault by others, see SPECIFICATIONS, APPENDIXES.
2. Vault door by others, see SPECIFICATIONS, APPENDIXES.
3. I.T. rack, by others.
4. A.T.M. by others, see APPENDIXES & exterior wall rough opening requirements.
5. Night depository by others, see APPENDIXES & exterior wall rough opening requirements.
6. Undercounter steel cabinets by others, see SPECIFICATIONS, APPENDIXES.
7. Teller window and service drawer by others, see SPECIFICATIONS, APPENDIXES & exterior wall rough opening requirements.
8. Remote Teller Unit by others, see SPECIFICATIONS, APPENDIXES.
9. Cash lockers by others, see SPECIFICATIONS, APPENDIXES.
10. Safe deposit boxes by others, see SPECIFICATIONS, APPENDIXES.
11. Electric water cooler, see PLUMBING PLAN.
12. Wall mounted T.V. (N.I.C.), see ELECTRICAL.
13. Wall mounted ladder, see SPECIFICATIONS.
14. Full size refrigerator (N.I.C.).
15. Storm water piping, see PLUMBING PLAN.
16. Storm water discharge, see PLUMBING PLAN.
17. Wall-mounted flag pole, see SPECIFICATIONS.
18. Wall-mounted, above door, fancoil unit, see MECH.
19. 4'x8'x¾" plywood mounted to wall for telecom equipment.
20. Electrical panel, see ELECTRICAL PLANS.
21. Undercounter refrigerator (N.I.C.).
22. Copier/printer (N.I.C.).
23. Floor mounted mop sink, see PLUMBING PLAN.
24. Shelf mounted water heater, see PLUMBING PLAN.
25. Steel post for mounting flagpole, see STRUCTURAL PLAN.
26. Brick pavers, see SITE PLAN.
27. 6" dia. steel pipe bollard, paint.
28. 4" dia. stell pipe bollard, paint.
29. 36" stainless steel grab bar.
30. 42" stainless steel grab bar.
31. Floor drain, see PLUMBING PLAN.
32. Plumbing vent offset to side of toilet, see PLUMBING.

ASHE | BROUSSARD | WEINZETTLE ARCHITECTS

This drawing and design are the property of Ashe Broussard Weinzette Architects. They are submitted on the condition that they are not to be used, reproduced, or copied, in whole or in part, or used for furnishing information to others, without the prior written consent of Ashe Broussard Weinzette Architects. All common law rights of copyright and otherwise are hereby specifically reserved.

KEVIN R. BROUSSARD No. 3894 STATE OF LOUISIANA REGISTERED ARCHITECT

REVISIONS

revision	description	date
	-	-
	-	-

RED RIVER BANK
1918 Veterans Boulevard
Metairie, Louisiana 70005

project no. 2021.53
drawn KRB
checked
project date January 2023

sheet contents: CONSTRUCTION PLAN
drawing no. A3.0

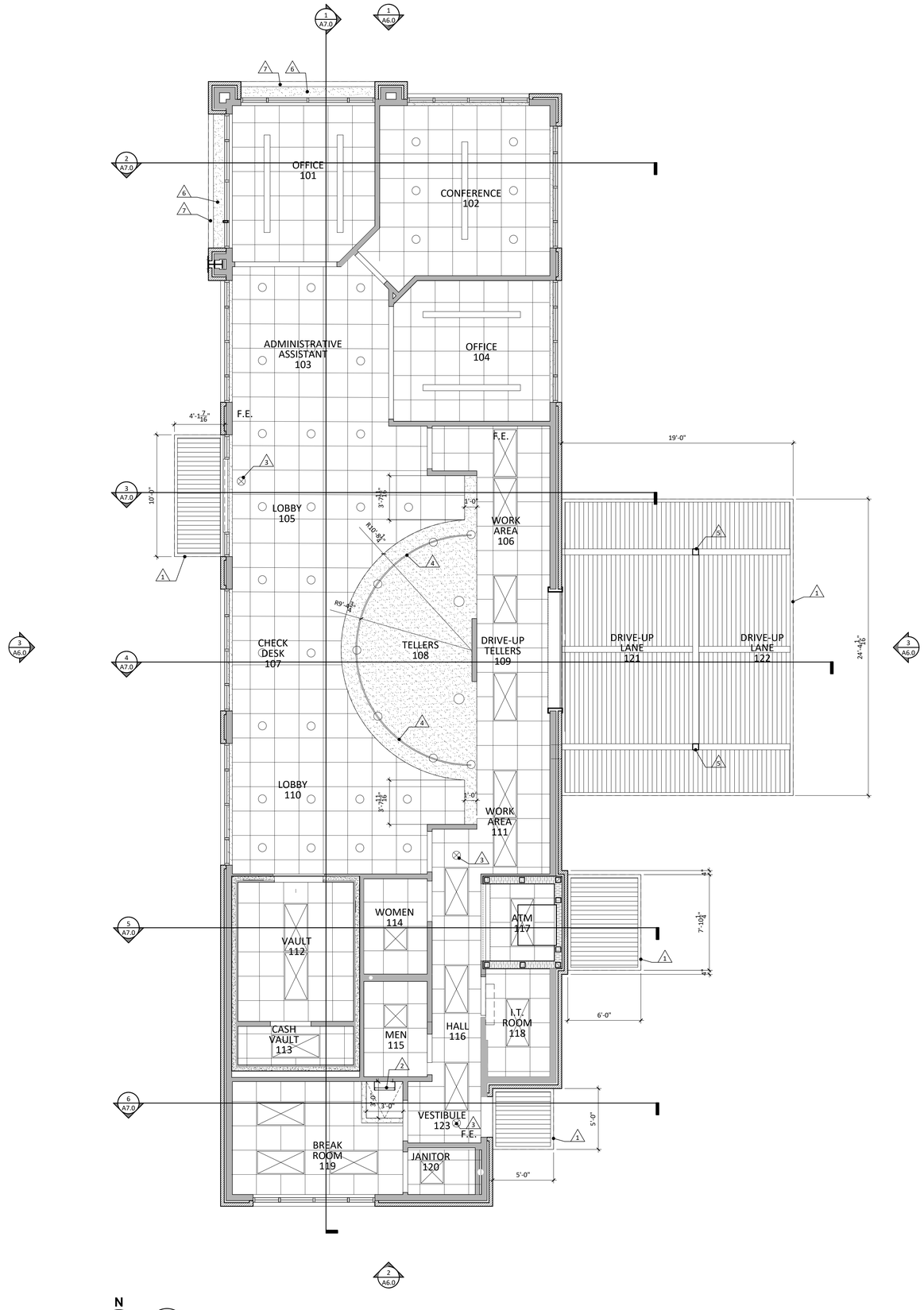

N

1 A5.0 A4.0 **REFLECTED CEILING PLAN**
SCALE: 1/4" = 1'-0"

GENERAL NOTES

- Indicates 2 x 2 acoustical tile
- Indicates painted gypsum furring
- Indicates HVAC supply air
- Indicates air tranfer grille
- Indicates recessed can lighting fixture
- Indicates 2 x 4 recessed troffer lighting fixture
- Indicates linear HVAC supply air

KEYNOTES

1. Pre-engineered Aluminum Canopy, see building elevations, sections, & SPECIFICATIONS.
2. Wall-mounted ladder, see SPECIFICATIONS.
3. Exit sign, see LIGHTING PLAN.
4. Low-voltage lighting track, see LIGHTING PLAN.
5. Support columns for aluminum canopy.
6. E.I.F.S. soffit at recessed window sections, see BUILDING SECTIONS.
7. Exposed brick lintel to be painted.

ASHE | BROUSSARD | WEINZETTLE ARCHITECTS

This drawing and design are the property of Ashe Broussard Weinzettle Architects. They are submitted on the condition that they are not to be used, reproduced, or copied, in whole or in part, or used for furnishing information to others, without the prior written consent of Ashe Broussard Weinzettle Architects. All common law rights of copyright and otherwise are hereby specifically reserved.

KEVIN R. BROUSSARD No. 3894 STATE OF LOUISIANA

REVISIONS

revision	description	date
	-	-
	-	-

RED RIVER BANK

1918 Veterans Boulevard
Metairie, Louisiana 70005

project no. 2021.53
drawn KRB
checked #
project date January 2023

sheet contents: CEILING PLAN

drawing no. A4.0

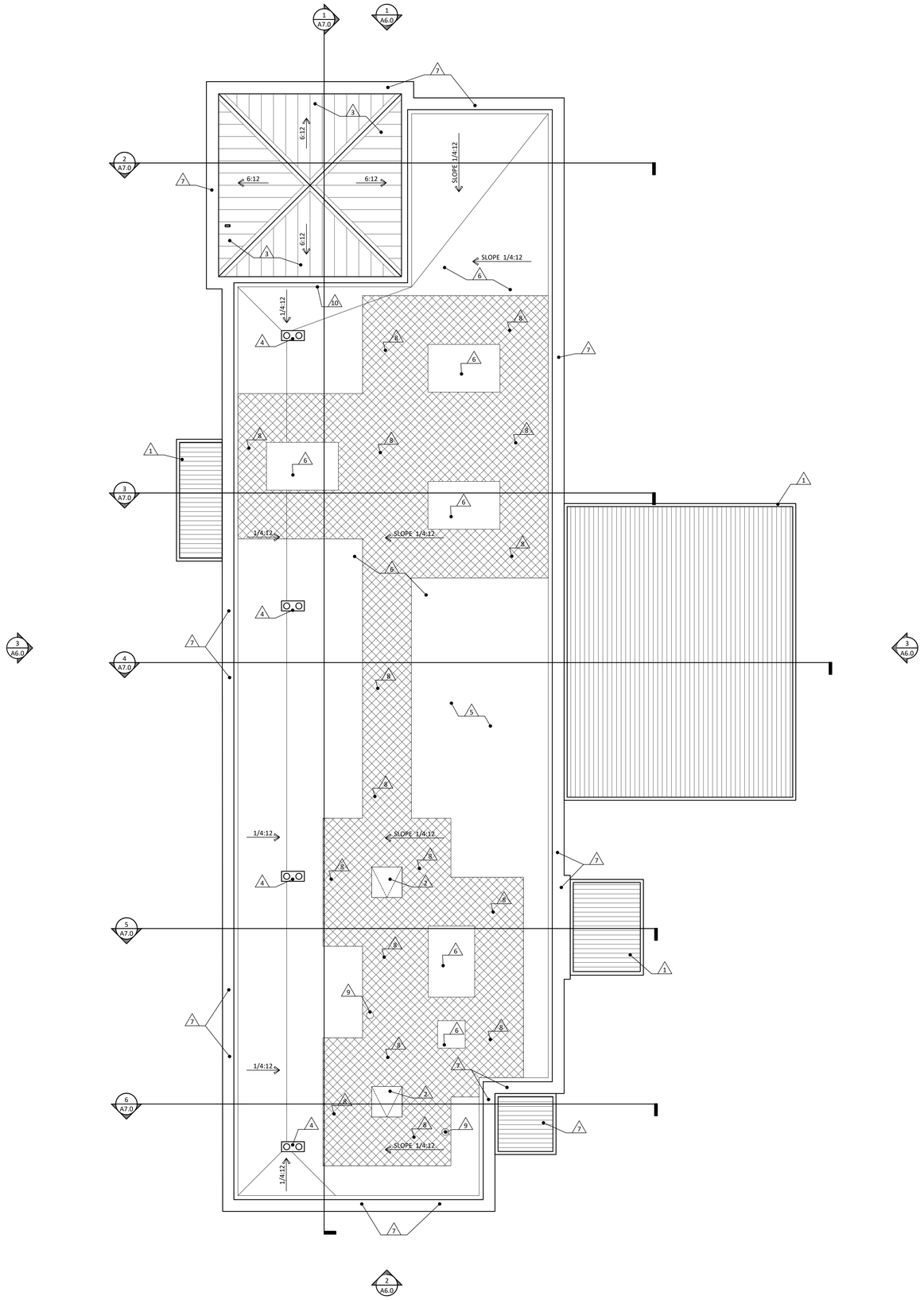

N

1 A3.0 A5.0

ROOF PLAN

SCALE: 3/16" = 1'-0"

KEYNOTES

1. Pre-engineered aluminum canopy, see SPECIFICATIONS.
2. Roof hatch, see SPECIFICATIONS.
3. Prefinished metal roof panels wih concealed fasteners, see SPECIFICATIONS.
4. Primary & Secondary roof drain assembly.
5. Single-ply roof membrane system, see SPECIFICATIONS.
6. HVAC Unit, see MECHANICAL DRAWINGS.
7. Prefinished metal coping cap with concealed fasteners.
8. Flexible TPO Walkway (Diamond Pattern).
9. Plumbing Vent, see PLUMBING PLAN.
10. Parapet vent in vertical wall surface, see SPECIFICATIONS.

- Indicates T.P.O. walkway.

ASHE | BROUSSARD | WEINZETTLE
ARCHITECTS

This drawing and design are the property of Ashe Broussard Weinzettle Architects. They are submitted on the condition that they are not to be used, reproduced, or copied, in whole or in part, or used for furnishing information to others, without the prior written consent of Ashe Broussard Weinzettle Architects. All common law rights of copyright and otherwise are hereby specifically reserved.

KEVIN R. BROUSSARD No. 3894 STATE OF LOUISIANA

REVISIONS

revision	description	date
	-	-
	-	-

RED RIVER BANK

1918 Veterans Boulevard
Metairie, Louisiana 70005

project no. 2021.53
drawn KRB
checked #
project date January 2023

sheet contents: ROOF PLAN

drawing no. A5.0

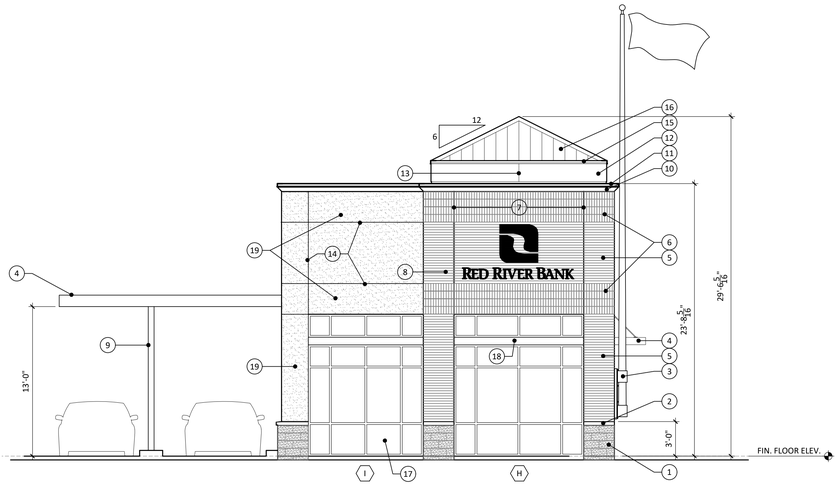

1 A6.0 A3.0 **NORTH ELEVATION**
SCALE: 3/16" = 1'-0"

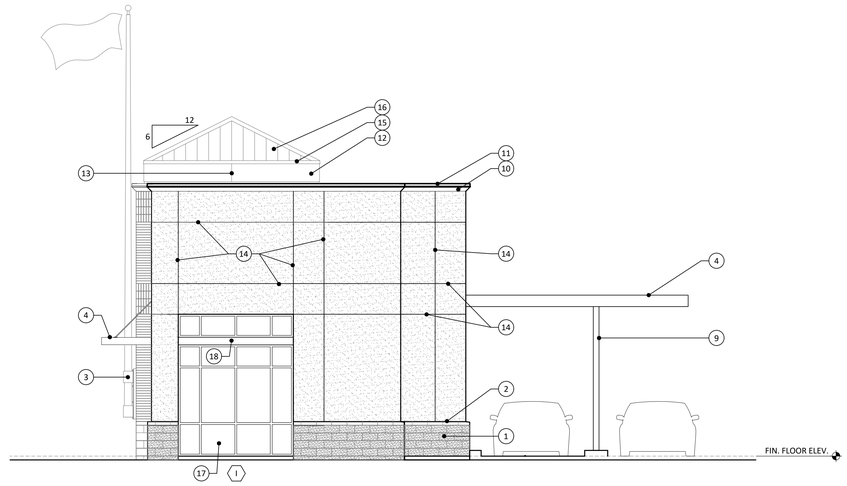

2 A6.0 A3.0 **SOUTH ELEVATION**
SCALE: 3/16" = 1'-0"

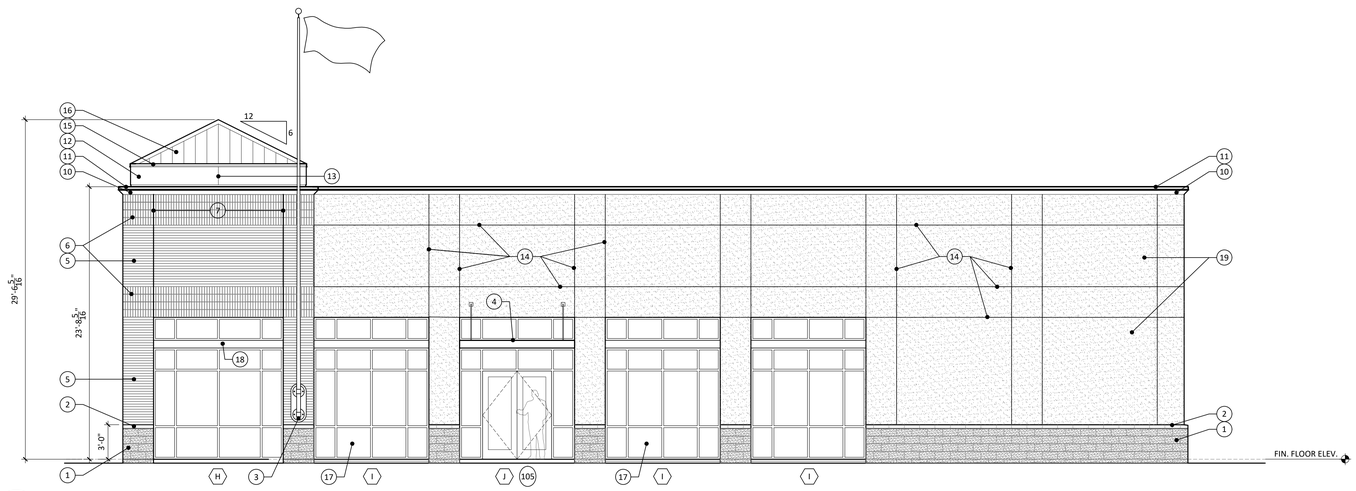

3 A6.0 A3.0 **WEST ELEVATION**
SCALE: 3/16" = 1'-0"

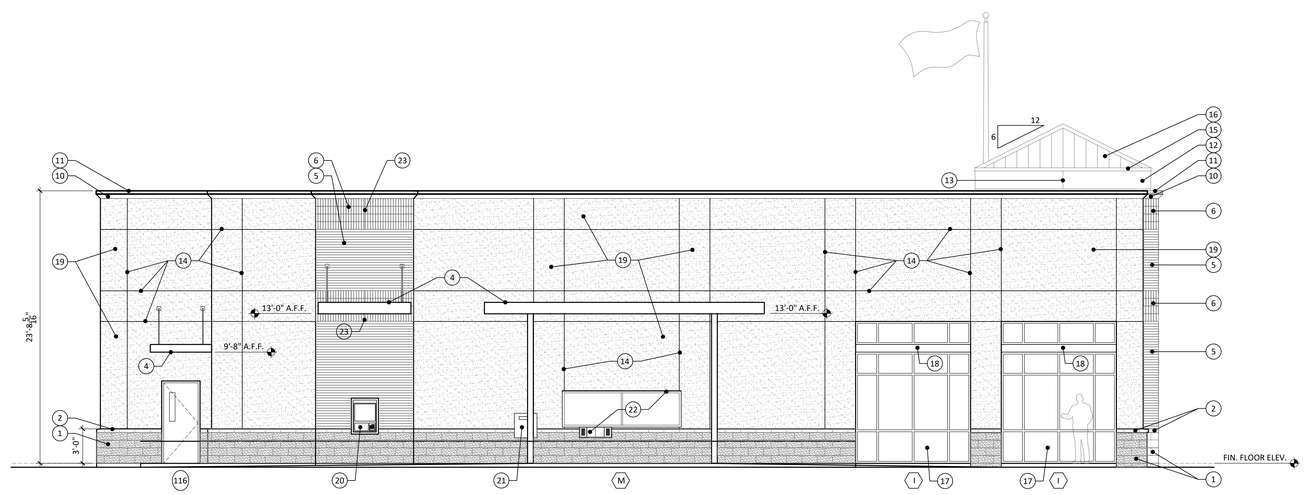

3 A6.0 A3.0 **WEST ELEVATION**
SCALE: 3/16" = 1'-0"

ELEVATION KEYNOTES

1. Split-faced concrete block, painted.
2. Smooth-faced concrete block, painted
3. Aluminum flag pole, building maounted, see SPECS.
4. Pre-engineered aluminum canopy, see SPECIFICATIONS.
5. Brick veneer, running bond.
6. Brick veneer, soldier course.
7. Masonry control joint with backer rod & elastomeric caulk, ½" in width.
8. Reverse channel lighted signage (N.I.C.)
9. Canopy support column, included as component in pre-engineered canopy system.
10. Fypon exterior decorative moulding, painted, see SPECS.
11. Pre-finished metal flashing.
12. .312" Hardie Architectural Panel, fine sand, pre-primed & finish painted in field.
13. Vertical joint at architectural panel. Provide ⅛" joint & elastomeric caulk.
14. 1½" "V" groove routed joint in E.F.I.S.
15. Prefinished metal drip.
16. Prefinished metal roof panels, 12" width, see SPECS.
17. Storefront glazing, see SPECIFICATIONS.
18. Aluminum brake metal, see SPECIFICATIONS.
19. Exterior Insulated Finish System, see SPECIFICATIONS.
20. A.T.M. (N.I.C.), see SPECIFICATION APPENDIXES for rough opening requirements.
21. Night depository (N.I.C.), see SPECIFICATION APPENDIXES for rough opening requirements.
22. Teller window and drawer (N.I.C.), see SPECIFICATION APPENDIXES for rough opening requirements.
23. Any partial brick to be at center.

ASHE | BROUSSARD | WEINZETTLE ARCHITECTS

This drawing and design are the property of Ashe Broussard Weinzettle Architects. They are submitted on the condition that they are not to be used, reproduced, or copied, in whole or in part, or used for furnishing information to others, without the prior written consent of Ashe Broussard Weinzettle Architects. All common law rights of copyright and otherwise are hereby specifically reserved.

KEVIN R. BROUSSARD No. 3894 STATE OF LOUISIANA REGISTERED ARCHITECT

REVISIONS

revision	description	date
	-	-
	-	-

RED RIVER BANK
1918 Veterans Boulevard
Metairie, Louisiana 70005

project no. 2021.53
drawn KRB
checked -
project date January 2023

sheet contents: BUILDING ELEVATIONS
drawing no. A6.0

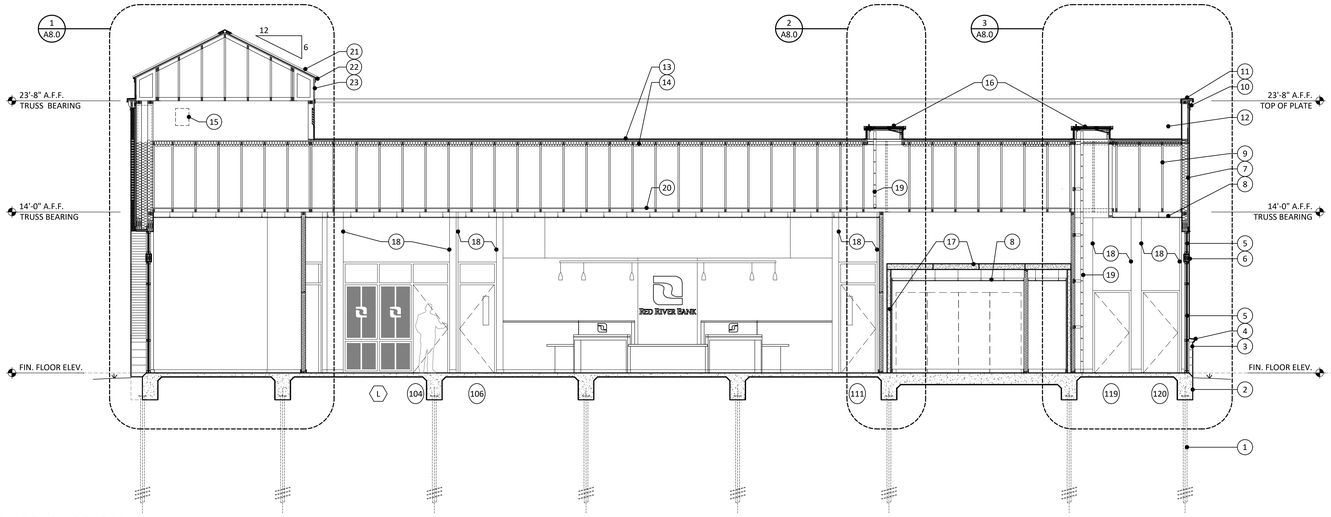

1 BUILDING SECTION
A3.0 A7.0
SCALE: 3/16" = 1'-0"

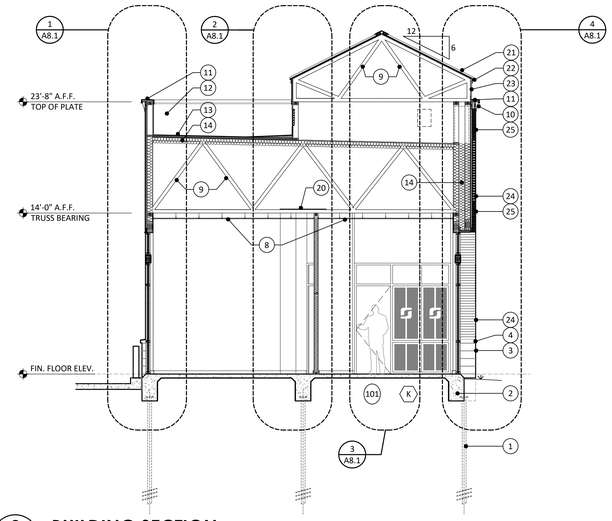

2 BUILDING SECTION
A3.0 A7.0
SCALE: 3/16" = 1'-0"

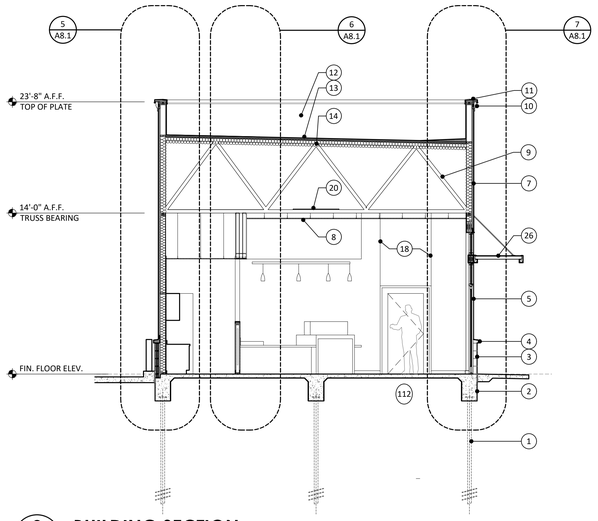

3 BUILDING SECTION
A3.0 A7.0
SCALE: 3/16" = 1'-0"

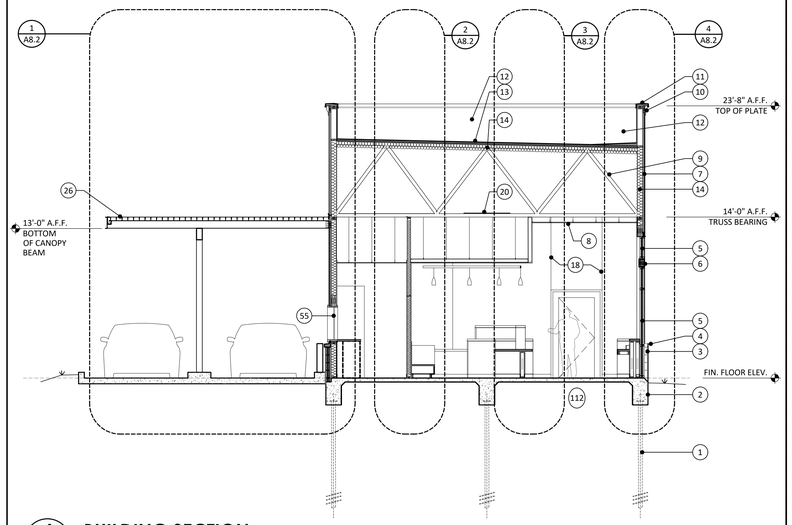

4 BUILDING SECTION
A3.0 A7.0
SCALE: 3/16" = 1'-0"

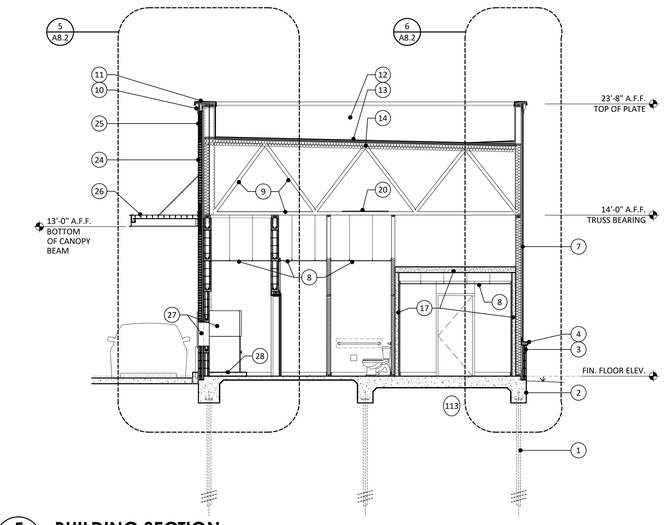

5 BUILDING SECTION
A3.0 A7.0
SCALE: 3/16" = 1'-0"

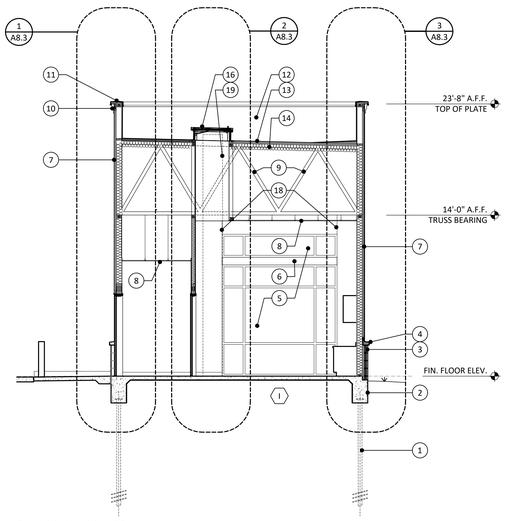

6 BUILDING SECTION
A3.0 A7.0
SCALE: 3/16" = 1'-0"

SECTION KEYNOTES

1. Helical pier, see STRUCTURAL PLANS.
2. Concrete footing, see STRUCTURAL PLANS.
3. 4" masonry veneer, split-faced concrete block.
4. 4" masonry veneer, smooth-faced concrete block.
5. Aluminum storefront glazing.
6. Aluminum brake-metal over wood substrate.
7. 1½" Exterior Insulation Finish System
8. Acoustical ceiling.
9. Pre-fabricated wood trusses @ 24" o.c.
10. Fypon exterior decorative moulding, painted.
11. Pre-finished metal coping w/ concealed hold-down clips.
12. Single-ply T.P.O. roof membrane adhered to back of parapet wall.
13. Single-ply T.P.O. roofing system over rigid insulation over wood deck.
14. Spray foam insulation w/ spray applied ignition barrier.
15. Ventilation louver, see SPECIFICATIONS.
16. Roof access hatch, see SPECIFICATIONS.
17. Prefabricated concrete vault system (N.I.C.).
18. Drywall expansion joints. Typical at each side of each interior door & window frame.
19. Wall mounted aluminum ladder, see SPECIFICATIONS.
20. ¾" plywood floor for catwalk thru truss voids.
21. Prefinished metal roof panels.
22. Prefinished metal drip.
23. .312" Hardie Architectural Panel.
24. Brick veneer, running bond.
25. Brick veneer, soldier course.
26. Pre-engineered aluminum canopy, see SPECIFICATIONS.
27. ATM machine (N.I.C.), see SPECIFICATIONS.
28. Concrete equipment pad for ATM, see SPECIFICATIONS APPENDIX.
29. Two(2) layers ¾" plywood.
30. ½" O.S.B.
31. ¼" joint w/ backer rod & elastomeric caulk.
32. Weather barrier.
33. Vapor barrier.
34. ⅝" gypsum sheathing.
35. 2x4 wood studs at 16" o.c.
36. 3½" fiberglass batt insulation.
37. Wood base.
38. 4" resilient base.
39. ¾" plywood roof deck, see STRUCTURAL.
40. Ventilation louvers w. T.P.O. flange, see SPECIFICATIONS.
41. 2x4 wood furring at 16"o.c..
42. Panel closure.
43. Prefinished metal ridge cover.
44. ½" o.s.b. gussett at 4'-0" o.c.
45. Composite flitch beam, see STRUCTURAL.
46. 2x6 wood studs at 16" o.c. at exterior wall.
47. 6" fiberglass batt insulation at exterior wall.
48. Simpson Strong-Tie RT 400-10 Ready-Track 20 gauge curved framing.
49. Metal studs, 20 gauge, at 16" o.c.
50. ½" expansion joint material.
51. Steel pipe bollard, painted, see Site Plan.
52. Brick ledge beyond.
53. Truss beyond.
54. Provide blocking as required to anchor ladder supports.
55. Teller window (N.I.C.), see SPECIFICATIONS, APPENDIX for rough opening requirements.
56. 8x8x16 c.m.u.
57. 6x8x16 c.m.u.
58. Continuous bond beam w/ two(2) #4 bars at all four walls of room.
59. Fluid applied waterproofing at c.m.u.
60. Prefinished metal flashing.
61. Elastomeric caulk.
62. Steel lintel, see STRUCTURAL.
63. Provide continuous blocking at canopy for anchorage at E.I.F.S.
64. Dampproofing.
65. 4" masonry sill block.
66. ½" rigid insulation

ASHE | BROUSSARD | WEINZETTLE ARCHITECTS

This drawing and design are the property of Ashe Broussard Weinzettle Architects. They are submitted on the condition that they are not to be used, reproduced, or copied, in whole or in part, or used for furnishing information to others, without the prior written consent of Ashe Broussard Weinzettle Architects. All common law rights of copyright and otherwise are hereby specifically reserved.

KEVIN R. BROUSSARD No. 3894 STATE OF LOUISIANA

REVISIONS

revision	description	date
	-	-
	-	-

RED RIVER BANK

1918 Veterans Boulevard
Metairie, Louisiana 70005

project no: 2021.53
drawn: KBB
checked: #
project date: January 2023

sheet contents: BUILDING SECTIONS

drawing no: A7.0

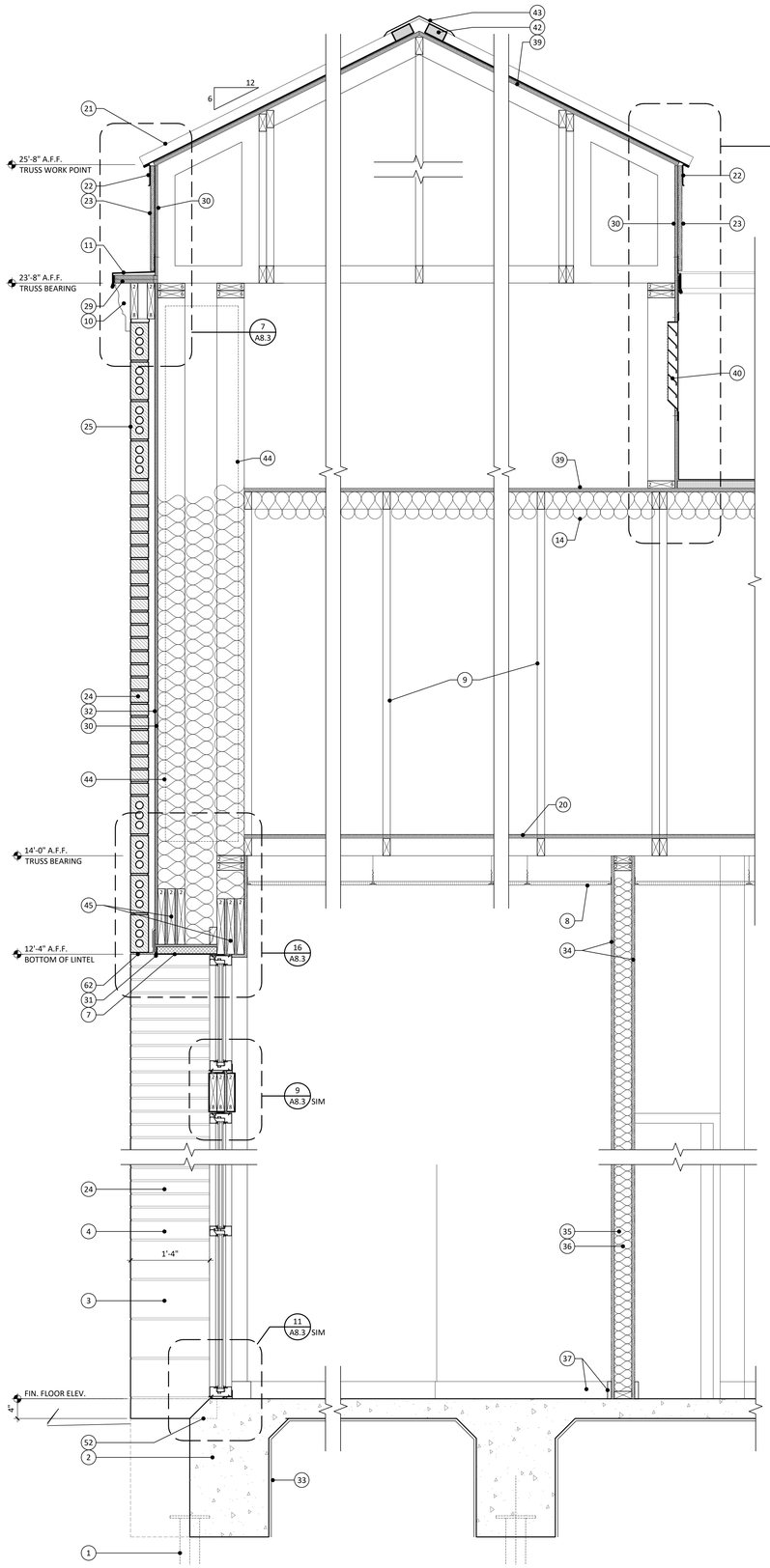

1 A7.0 A8.0 **BUILDING DETAIL**
SCALE: 1" = 1'-0"

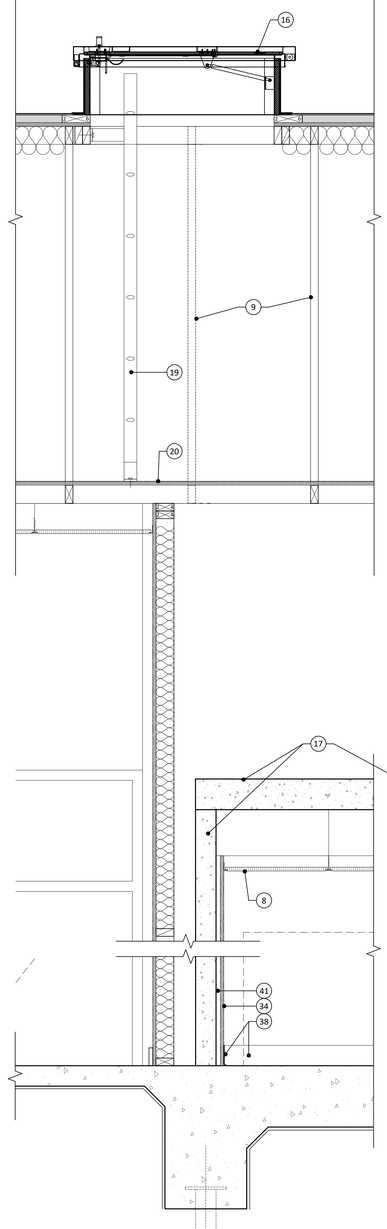

2 A7.0 A8.0 **BUILDING DETAIL**
SCALE: 1" = 1'-0"

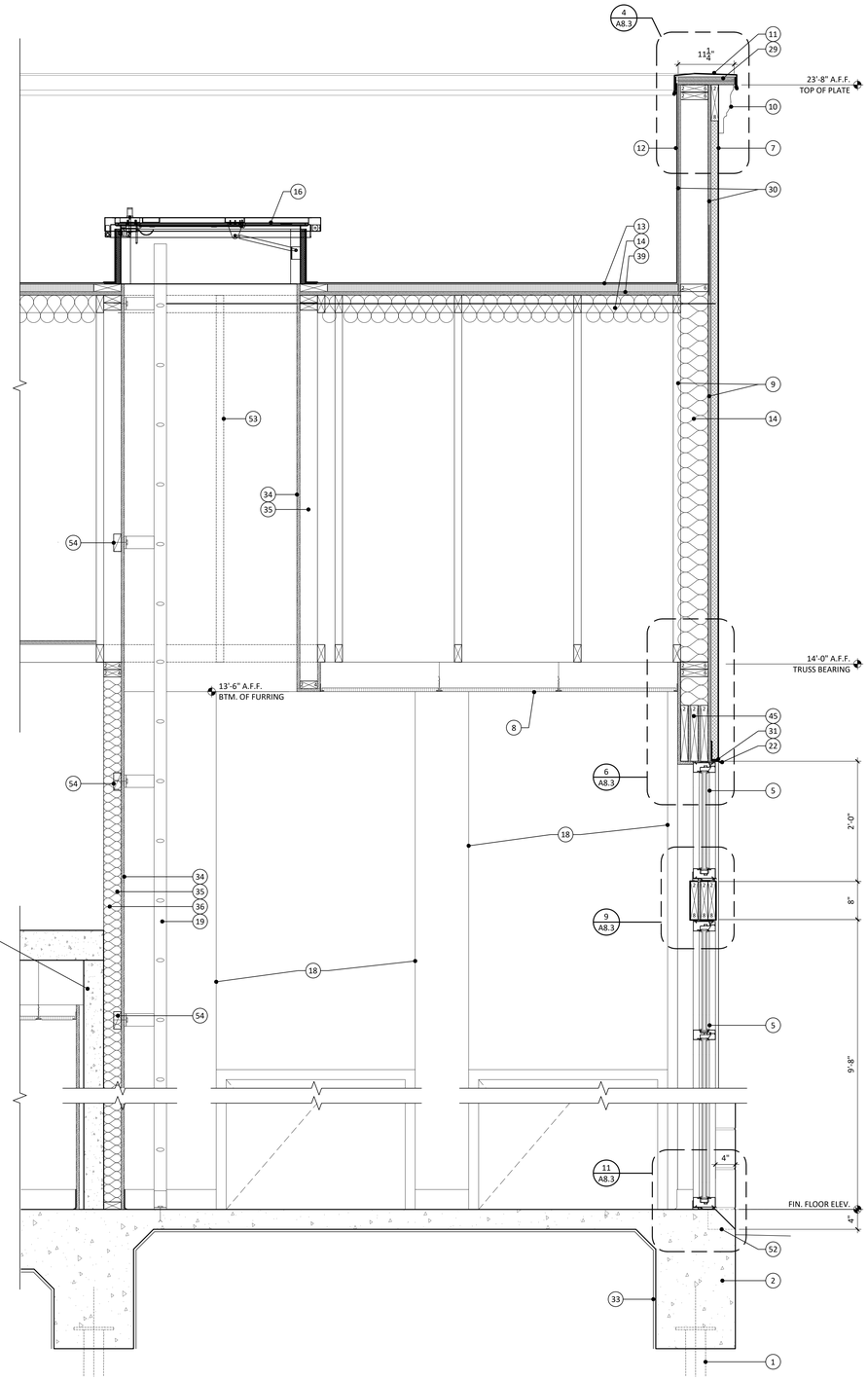

3 A7.0 A8.0 **BUILDING DETAIL**
SCALE: 1" = 1'-0"

SECTION KEYNOTES

1. Helical pier, see STRUCTURAL PLANS.
2. Concrete footing, see STRUCTURAL PLANS.
3. 4" masonry veneer, split-faced concrete block.
4. 4" masonry veneer, smooth-faced concrete block.
5. Aluminum storefront glazing.
6. Aluminum brake-metal over wood substrate.
7. 1½" Exterior Insulation Finish System
8. Acoustical ceiling.
9. Pre-fabricated wood trusses @ 24" o.c.
10. Fypon exterior decorative moulding, painted.
11. Pre-finished metal coping w/ concealed hold-down clips.
12. Single-ply T.P.O. roof membrane adhered to back of parapet wall.
13. Single-ply T.P.O. roofing system over rigid insulation over wood deck.
14. Spray foam insulation w/ spray applied ignition barrier.
15. Ventilation louver, see SPECIFICATIONS.
16. Roof access hatch, see SPECIFICATIONS.
17. Prefabricated concrete vault system (N.I.C.).
18. Drywall expansion joints. Typical at each side of each interior door & window frame.
19. Wall mounted aluminum ladder, see SPECIFICATIONS.
20. ¾" plywood floor for catwalk thru truss voids.
21. Prefinished metal roof panels.
22. Prefinished metal drip.
23. .312" Hardie Architectural Panel.
24. Brick veneer, running bond.
25. Brick veneer, soldier course.
26. Pre-engineered aluminum canopy, see SPECIFICATIONS.
27. ATM machine (N.I.C.), see SPECIFICATIONS.
28. Concrete equipment pad for ATM, see SPECIFICATIONS APPENDIX.
29. Two(2) layers ¾" plywood.
30. ½" O.S.B.
31. ¼" joint w/ backer rod & elastomeric caulk.
32. Weather barrier.
33. Vapor barrier.
34. ⅝" gypsum sheathing.
35. 2x4 wood studs at 16" o.c.
36. 3½" fiberglass batt insulation.
37. Wood base.
38. 4" resilient base.
39. ¾" plywood roof deck, see STRUCTURAL.
40. Ventilation louvers w. T.P.O. flange, see SPECIFICATIONS.
41. 2x4 wood furring at 16"o.c..
42. Panel closure.
43. Prefinished metal ridge cover.
44. ½" o.s.b. gussett at 4'-0" o.c.
45. Composite flitch beam, see STRUCTURAL.
46. 2x6 wood studs at 16" o.c. at exterior wall.
47. 6" fiberglass batt insulation at exterior wall.
48. Simpson Strong-Tie RT 400-10 Ready-Track 20 gauge curved framing.
49. Metal studs, 20 gauge, at 16" o.c.
50. ½" expansion joint material.
51. Steel pipe bollard, painted, see Site Plan.
52. Brick ledge beyond.
53. Truss beyond.
54. Provide blocking as required to anchor ladder supports.
55. Teller window (N.I.C.), see SPECIFICATIONS, APPENDIX for rough opening requirements.
56. 8x8x16 c.m.u.
57. 6x8x16 c.m.u.
58. Continuous bond beam w/ two(2) #4 bars at all four walls of room.
59. Fluid applied waterproofing at c.m.u.
60. Prefinished metal flashing.
61. Elastomeric caulk.
62. Steel lintel, see STRUCTURAL.
63. Provide continuous blocking at canopy for anchorage at E.I.F.S.
64. Dampproofing.
65. 4" masonry sill block.
66. 1½" rigid insulation

ASHE | BROUSSARD | WEINZETTLE
ARCHITECTS

This drawing and design are the property of Ashe Broussard Weinzettle Architects. They are submitted on the condition that they are not to be used, reproduced, or copied, in whole or in part, or used for furnishing information to others, without the prior written consent of Ashe Broussard Weinzettle Architects. All common law rights of copyright and otherwise are hereby specifically reserved.

KEVIN R. BROUSSARD No. 3894 STATE OF LOUISIANA REGISTERED ARCHITECT

REVISIONS

revision	description	date
	-	-
	-	-

RED RIVER BANK

1918 Veterans Boulevard
Metairie, Louisiana 70005

project no. 2021.53
drawn KRB
checked -
project date January 2023

sheet contents
BUILDING DETAILS

drawing no.
A8.0

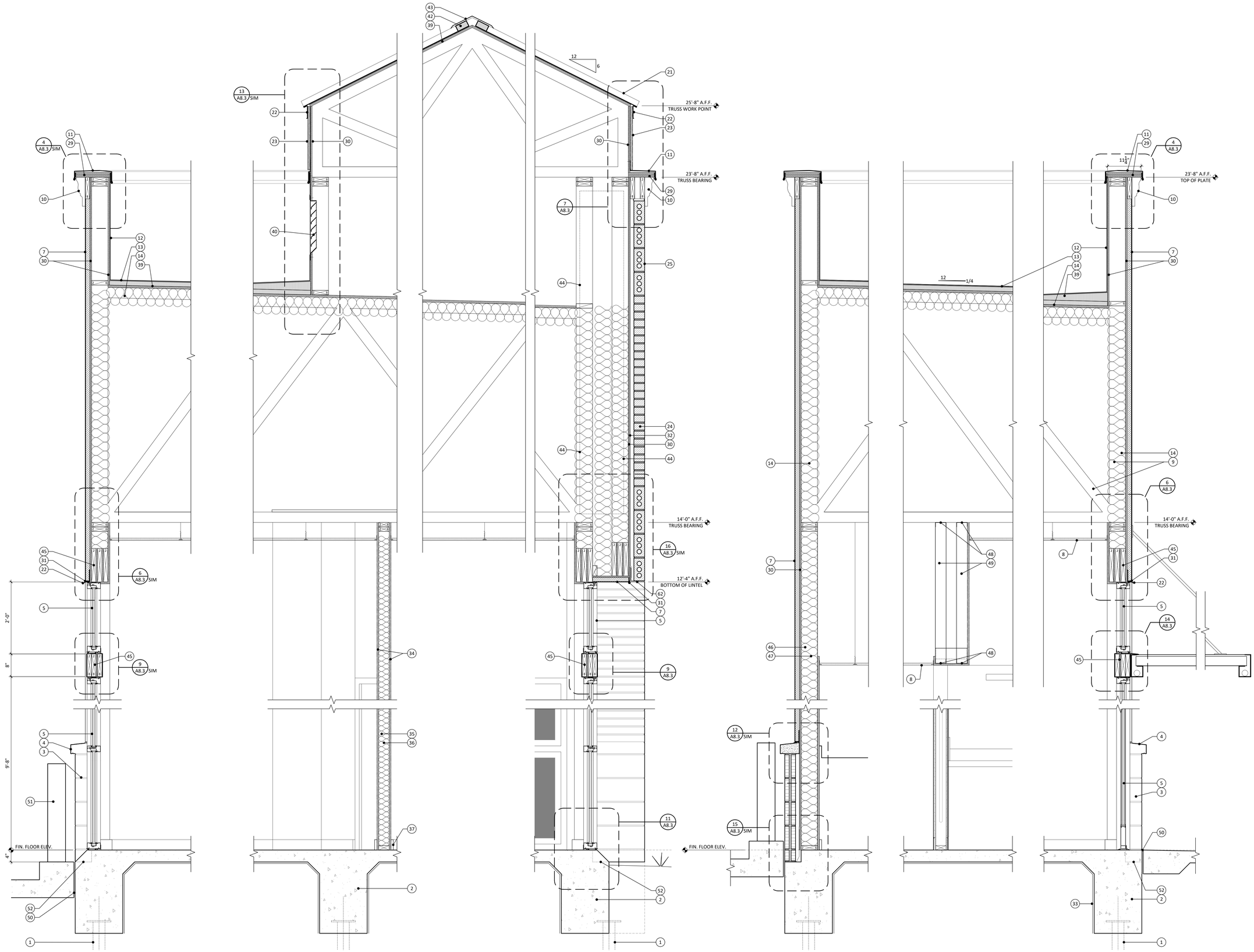

1 A7.0 A8.1 **BUILDING DETAIL**
SCALE: 1" = 1'-0"

2 A7.0 A8.1 **BUILDING DETAIL**
SCALE: 1" = 1'-0"

3 A7.0 A8.1 **BUILDING DETAIL**
SCALE: 1" = 1'-0"

4 A7.0 A8.1 **BUILDING DETAIL**
SCALE: 1" = 1'-0"

5 A7.0 A8.1 **BUILDING DETAIL**
SCALE: 1" = 1'-0"

6 A7.0 A8.1 **BUILDING DETAIL**
SCALE: 1" = 1'-0"

7 A7.0 A8.1 **BUILDING DETAIL**
SCALE: 1" = 1'-0"

SECTION KEYNOTES

1. Helical pier, see STRUCTURAL PLANS.
2. Concrete footing, see STRUCTURAL PLANS.
3. 4" masonry veneer, split-faced concrete block.
4. 4" masonry veneer, smooth-faced concrete block.
5. Aluminum storefront glazing.
6. Aluminum brake-metal over wood substrate.
7. 1½" Exterior Insulation Finish System
8. Acoustical ceiling.
9. Pre-fabricated wood trusses @ 24" o.c.
10. Fypon exterior decorative moulding, painted.
11. Pre-finished metal coping w/ concealed hold-down clips.
12. Single-ply T.P.O. roof membrane adhered to back of parapet wall.
13. Single-ply T.P.O. roofing system over rigid insulation over wood deck.
14. Spray foam insulation w/ spray applied ignition barrier.
15. Ventilation louver, see SPECIFICATIONS.
16. Roof access hatch, see SPECIFICATIONS.
17. Prefabricated concrete vault system (N.I.C.).
18. Drywall expansion joints. Typical at each side of each interior door & window frame.
19. Wall mounted aluminum ladder, see SPECIFICATIONS.
20. ¾" plywood floor for catwalk thru truss voids.
21. Prefinished metal roof panels.
22. Prefinished metal drip.
23. .312" Hardie Architectural Panel.
24. Brick veneer, running bond.
25. Brick veneer, soldier course.
26. Pre-engineered aluminum canopy, see SPECIFICATIONS.
27. ATM machine (N.I.C.), see SPECIFICATIONS.
28. Concrete equipment pad for ATM, see SPECIFICATIONS APPENDIX.
29. Two(2) layers ¾" plywood.
30. ½" O.S.B.
31. ¼" joint w/ backer rod & elastomeric caulk.
32. Weather barrier.
33. Vapor barrier.
34. ⅝" gypsum sheathing.
35. 2x4 wood studs at 16" o.c.
36. 3½" fiberglass batt insulation.
37. Wood base.
38. 4" resilient base.
39. ¾" plywood roof deck, see STRUCTURAL.
40. Ventilation louvers w. T.P.O. flange, see SPECIFICATIONS.
41. 2x4 wood furring at 16"o.c..
42. Panel closure.
43. Prefinished metal ridge cover.
44. ½" o.s.b. gussett at 4'-0" o.c.
45. Composite flitch beam, see STRUCTURAL.
46. 2x6 wood studs at 16" o.c. at exterior wall.
47. 6" fiberglass batt insulation at exterior wall.
48. Simpson Strong-Tie RT 400-10 Ready-Track 20 gauge curved framing.
49. Metal studs, 20 gauge, at 16" o.c.
50. ½" expansion joint material.
51. Steel pipe bollard, painted, see Site Plan.
52. Brick ledge beyond.
53. Truss beyond.
54. Provide blocking as required to anchor ladder supports.
55. Teller window (N.I.C.), see SPECIFICATIONS, APPENDIX for rough opening requirements.
56. 8x8x16 c.m.u.
57. 6x8x16 c.m.u.
58. Continuous bond beam w/ two(2) #4 bars at all four walls of room.
59. Fluid applied waterproofing at c.m.u.
60. Prefinished metal flashing.
61. Elastomeric caulk.
62. Steel lintel, see STRUCTURAL.
63. Provide continuous blocking at canopy for anchorage at E.I.F.S.
64. Dampproofing.
65. 4" masonry sill block.
66. ½" rigid insulation

ASHE | BROUSSARD | WEINZETTLE ARCHITECTS

This drawing and design are the property of Ashe Broussard Weinzettle Architects. They are submitted on the condition that they are not to be used, reproduced, or copied, in whole or in part, or used for furnishing information to others, without the prior written consent of Ashe Broussard Weinzettle Architects. All common law rights of copyright and otherwise are hereby specifically reserved.

KEVIN R. BROUSSARD No. 3894 STATE OF LOUISIANA REGISTERED ARCHITECT

REVISIONS

revision	description	date
	-	-
	-	-

RED RIVER BANK

1918 Veterans Boulevard
Metairie, Louisiana 70005

project no. **2021.53**
drawn **KRB**
checked **-**
project date **January 2023**

sheet contents **BUILDING DETAILS**

drawing no. **A8.1**

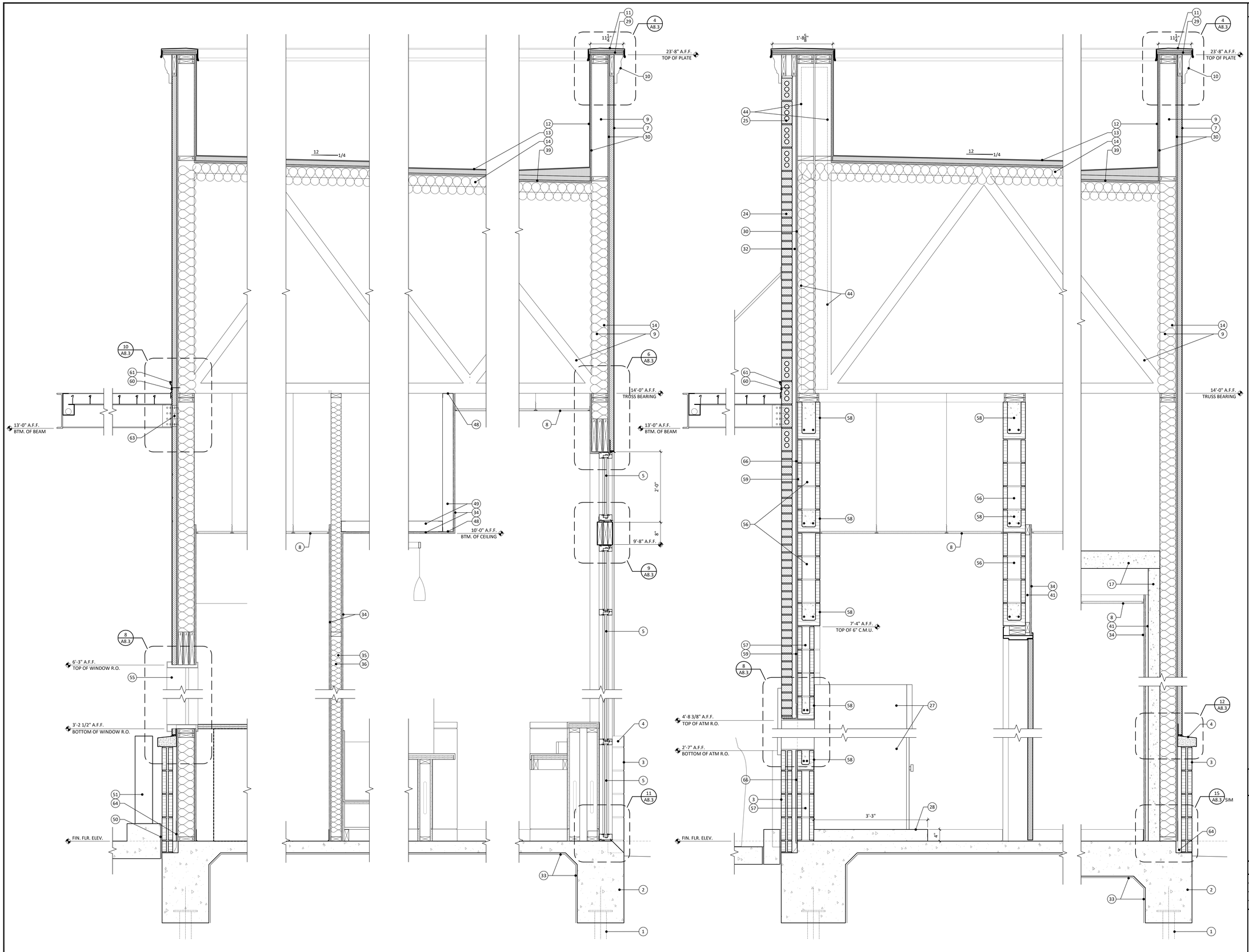

SECTION KEYNOTES

1. Helical pier, see STRUCTURAL PLANS.
2. Concrete footing, see STRUCTURAL PLANS.
3. 4" masonry veneer, split-faced concrete block.
4. 4" masonry veneer, smooth-faced concrete block.
5. Aluminum storefront glazing.
6. Aluminum brake-metal over wood substrate.
7. 1½" Exterior Insulation Finish System
8. Acoustical ceiling.
9. Pre-fabricated wood trusses @ 24" o.c.
10. Fypon exterior decorative moulding, painted.
11. Pre-finished metal coping w/ concealed hold-down clips.
12. Single-ply T.P.O. roof membrane adhered to back of parapet wall.
13. Single-ply T.P.O. roofing system over rigid insulation over wood deck.
14. Spray foam insulation w/ spray applied ignition barrier.
15. Ventilation louver, see SPECIFICATIONS.
16. Roof access hatch, see SPECIFICATIONS.
17. Prefabricated concrete vault system (N.I.C.).
18. Drywall expansion joints. Typical at each side of each interior door & window frame.
19. Wall mounted aluminum ladder, see SPECIFICATIONS.
20. ¾" plywood floor for catwalk thru truss voids.
21. Prefinished metal roof panels.
22. Prefinished metal drip.
23. .312" Hardie Architectural Panel.
24. Brick veneer, running bond.
25. Brick veneer, soldier course.
26. Pre-engineered aluminum canopy, see SPECIFICATIONS.
27. ATM machine (N.I.C.), see SPECIFICATIONS.
28. Concrete equipment pad for ATM, see SPECIFICATIONS APPENDIX.
29. Two(2) layers ¾" plywood.
30. ½" O.S.B.
31. ¼" joint w/ backer rod & elastomeric caulk.
32. Weather barrier.
33. Vapor barrier.
34. ⅝" gypsum sheathing.
35. 2x4 wood studs at 16" o.c.
36. 3½" fiberglass batt insulation.
37. Wood base.
38. 4" resilient base.
39. ¾" plywood roof deck, see STRUCTURAL.
40. Ventilation louvers w. T.P.O. flange, see SPECIFICATIONS.
41. 2x4 wood furring at 16"o.c..
42. Panel closure.
43. Prefinished metal ridge cover.
44. ½" o.s.b. gussett at 4'-0" o.c.
45. Composite flitch beam, see STRUCTURAL.
46. 2x6 wood studs at 16" o.c. at exterior wall.
47. 6" fiberglass batt insulation at exterior wall.
48. Simpson Strong-Tie RT 400-10 Ready-Track 20 gauge curved framing.
49. Metal studs, 20 gauge, at 16" o.c.
50. ½" expansion joint material.
51. Steel pipe bollard, painted, see Site Plan.
52. Brick ledge beyond.
53. Truss beyond.
54. Provide blocking as required to anchor ladder supports.
55. Teller window (N.I.C.), see SPECIFICATIONS, APPENDIX for rough opening requirements.
56. 8x8x16 c.m.u.
57. 6x8x16 c.m.u.
58. Continuous bond beam w/ two(2) #4 bars at all four walls of room.
59. Fluid applied waterproofing at c.m.u.
60. Prefinished metal flashing.
61. Elastomeric caulk.
62. Steel lintel, see STRUCTURAL.
63. Provide continuous blocking at canopy for anchorage at E.I.F.S.
64. Dampproofing.
65. 4" masonry sill block.
66. 1½" rigid insulation

1 A7.0 A8.2 **BUILDING DETAIL**
SCALE: 1" = 1'-0"

2 A7.0 A8.2 **BUILDING DETAIL**
SCALE: 1" = 1'-0"

3 A7.0 A8.2 **BUILDING DETAIL**
SCALE: 1" = 1'-0"

4 A7.0 A8.2 **BUILDING DETAIL**
SCALE: 1" = 1'-0"

5 A7.0 A8.2 **BUILDING DETAIL**
SCALE: 1" = 1'-0"

6 A7.0 A8.2 **BUILDING DETAIL**
SCALE: 1" = 1'-0"

ASHE | BROUSSARD | WEINZETTLE
ARCHITECTS

This drawing and design are the property of Ashe Broussard Weinzettle Architects. They are submitted on the condition that they are not to be used, reproduced, or copied, in whole or in part, or used for furnishing information to others, without the prior written consent of Ashe Broussard Weinzettle Architects. All common law rights of copyright and otherwise are hereby specifically reserved.

KEVIN R. BROUSSARD No. 3894 STATE OF LOUISIANA

REVISIONS

revision	description	date
	-	-
	-	-

RED RIVER BANK

1918 Veterans Boulevard
Metairie, Louisiana 70005

project no. 2021.53
drawn KRB
checked -
project date January 2023

sheet contents: BUILDING DETAILS

drawing no. A8.2

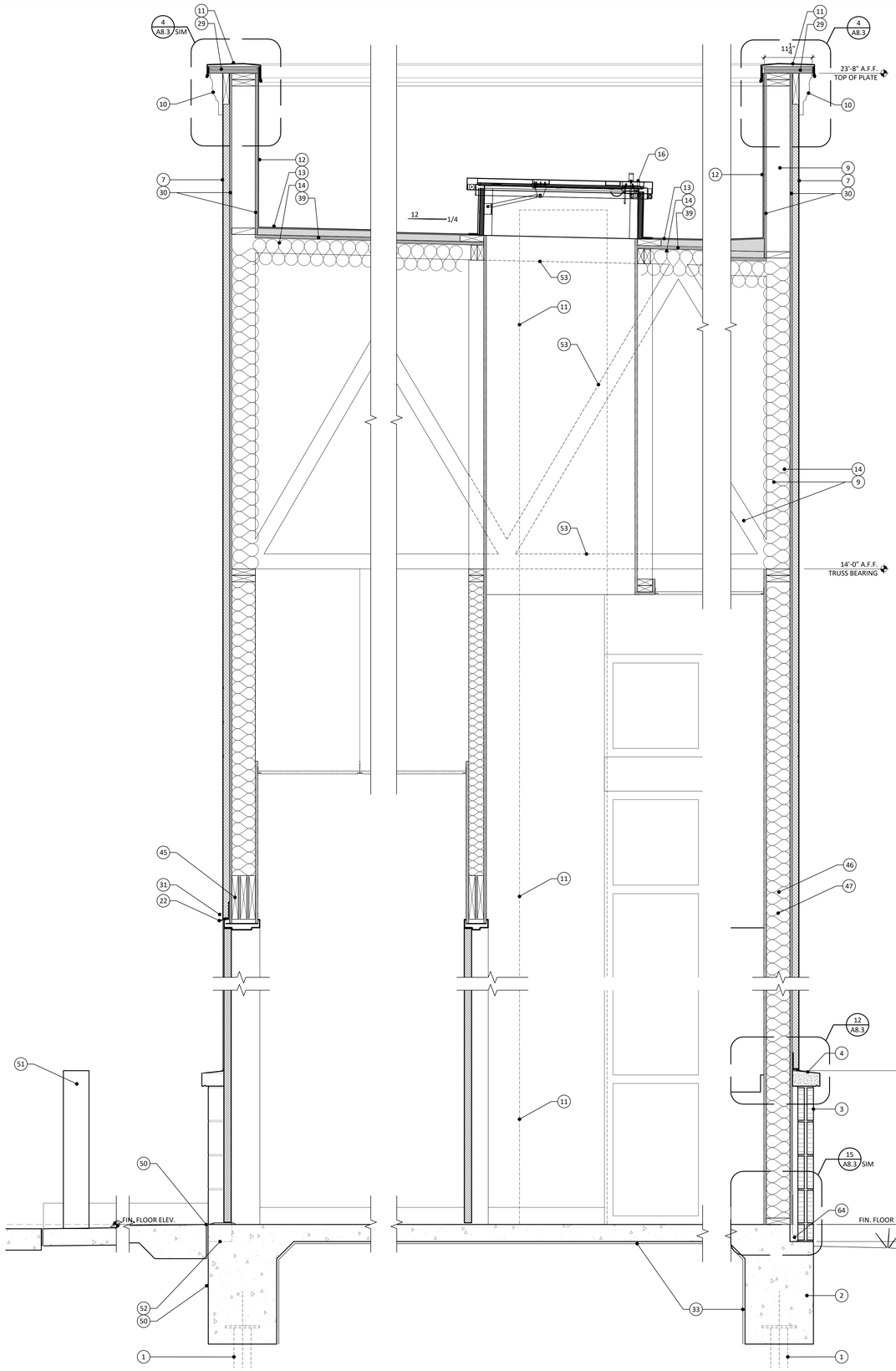

1 A7.0 A8.3 **BUILDING DETAIL**
SCALE: 1" = 1'-0"

2 A7.0 A8.3 **BUILDING DETAIL**
SCALE: 1" = 1'-0"

3 A7.0 A8.3 **BUILDING DETAIL**
SCALE: 1" = 1'-0"

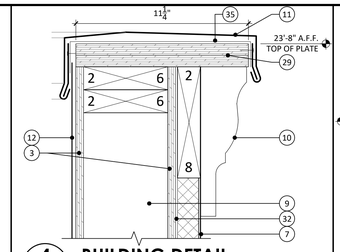

4 A7.0 A8.3 **BUILDING DETAIL**
SCALE: 3" = 1'-0"

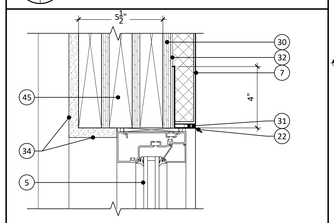

6 A7.0 A8.3 **BUILDING DETAIL**
SCALE: 3" = 1'-0"

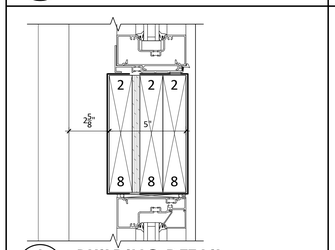

9 A7.0 A8.3 **BUILDING DETAIL**
SCALE: 3" = 1'-0"

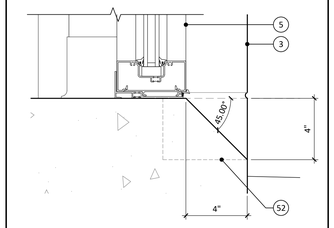

11 A7.0 A8.3 **BUILDING DETAIL**
SCALE: 3" = 1'-0"

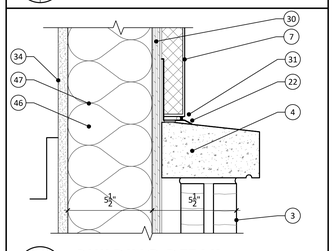

12 A7.0 A8.3 **BUILDING DETAIL**
SCALE: 3" = 1'-0"

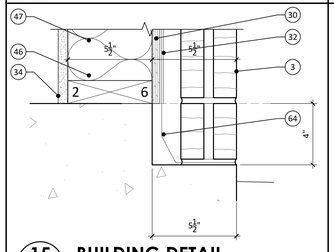

15 A7.0 A8.3 **BUILDING DETAIL**
SCALE: 3" = 1'-0"

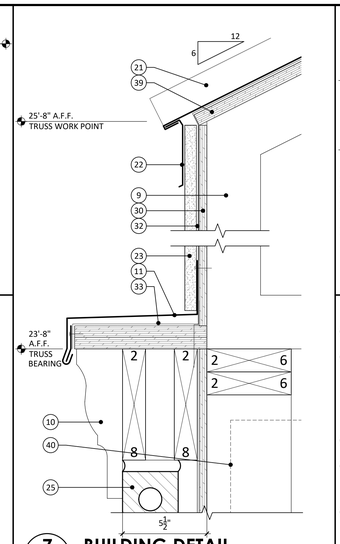

7 A7.0 A8.3 **BUILDING DETAIL**
SCALE: 3" = 1'-0"

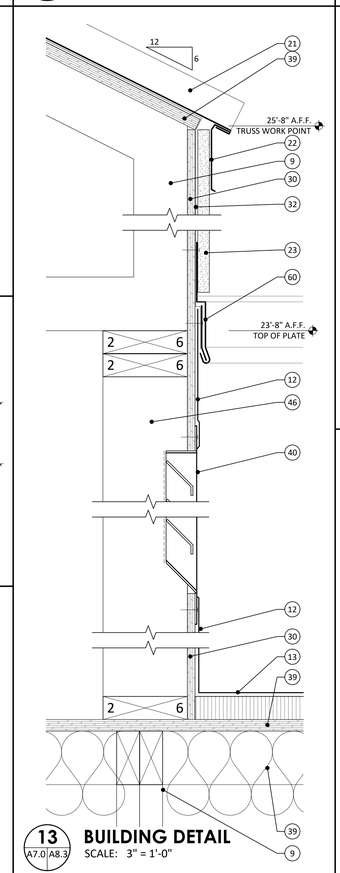

13 A7.0 A8.3 **BUILDING DETAIL**
SCALE: 3" = 1'-0"

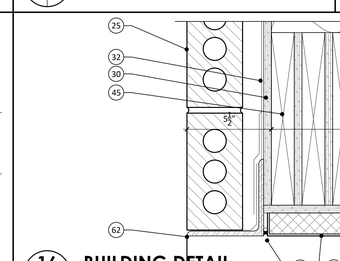

16 A7.0 A8.3 **BUILDING DETAIL**
SCALE: 3" = 1'-0"

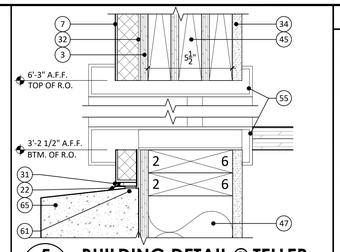

5 A7.0 A8.3 **BUILDING DETAIL @ TELLER WINDOW**
SCALE: 3" = 1'-0"

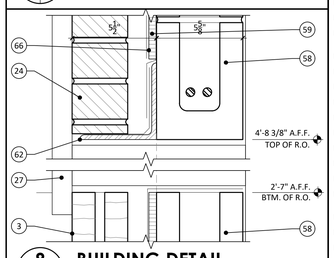

8 A7.0 A8.3 **BUILDING DETAIL**
SCALE: 3" = 1'-0"

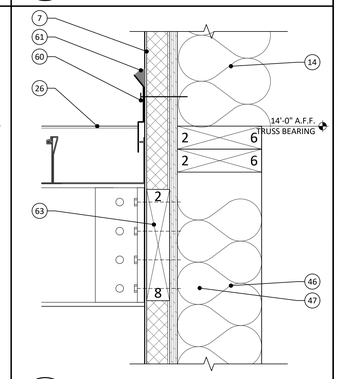

10 A7.0 A8.3 **BUILDING DETAIL**
SCALE: 3" = 1'-0"

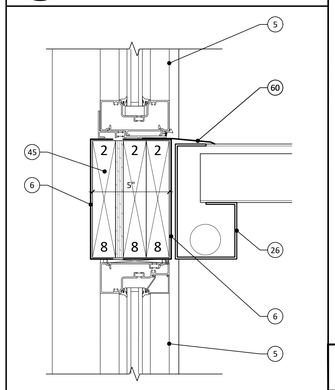

14 A7.0 A8.3 **BUILDING DETAIL**
SCALE: 3" = 1'-0"

SECTION KEYNOTES

1. Helical pier, see STRUCTURAL PLANS.
2. Concrete footing, see STRUCTURAL PLANS.
3. 4" masonry veneer, split-faced concrete block.
4. 4" masonry veneer, smooth-faced concrete block.
5. Aluminum storefront glazing.
6. Aluminum brake-metal over wood substrate.
7. 1½" Exterior Insulation Finish System
8. Acoustical ceiling.
9. Pre-fabricated wood trusses @ 24" o.c.
10. Fypon exterior decorative moulding, painted.
11. Pre-finished metal coping w/ concealed hold-down clips.
12. Single-ply T.P.O. roof membrane adhered to back of parapet wall.
13. Single-ply T.P.O. roofing system over rigid insulation over wood deck.
14. Spray foam insulation w/ spray applied ignition barrier.
15. Ventilation louver, see SPECIFICATIONS.
16. Roof access hatch, see SPECIFICATIONS.
17. Prefabricated concrete vault system (N.I.C.).
18. Drywall expansion joints. Typical at each side of each interior door & window frame.
19. Wall mounted aluminum ladder, see SPECIFICATIONS.
20. ¾" plywood floor for catwalk thru truss voids.
21. Prefinished metal roof panels.
22. Prefinished metal drip.
23. .312" Hardie Architectural Panel.
24. Brick veneer, running bond.
25. Brick veneer, soldier course.
26. Pre-engineered aluminum canopy, see SPECIFICATIONS.
27. ATM machine (N.I.C.), see SPECIFICATIONS.
28. Concrete equipment pad for ATM, see SPECIFICATIONS APPENDIX.
29. Two(2) layers ¾" plywood.
30. ½" O.S.B.
31. ¼" joint w/ backer rod & elastomeric caulk.
32. Weather barrier.
33. Vapor barrier.
34. ⅝" gypsum sheathing.
35. 2x4 wood studs at 16" o.c.
36. 3½" fiberglass batt insulation.
37. Wood base.
38. 4" resilient base.
39. ¾" plywood roof deck, see STRUCTURAL.
40. Ventilation louvers w. T.P.O. flange, see SPECIFICATIONS.
41. 2x4 wood furring at 16"o.c..
42. Panel closure.
43. Prefinished metal ridge cover.
44. ½" o.s.b. gussett at 4'-0" o.c.
45. Composite flitch beam, see STRUCTURAL.
46. 2x6 wood studs at 16" o.c. at exterior wall.
47. 6" fiberglass batt insulation at exterior wall.
48. Simpson Strong-Tie RT 400-10 Ready-Track 20 gauge curved framing.
49. Metal studs, 20 gauge, at 16" o.c.
50. ½" expansion joint material.
51. Steel pipe bollard, painted, see Site Plan.
52. Brick ledge beyond.
53. Truss beyond.
54. Provide blocking as required to anchor ladder supports.
55. Teller window (N.I.C.), see SPECIFICATIONS, APPENDIX for rough opening requirements.
56. 8x8x16 c.m.u.
57. 6x8x16 c.m.u.
58. Continuous bond beam w/ two(2) #4 bars at all four walls of room.
59. Fluid applied waterproofing at c.m.u.
60. Prefinished metal flashing.
61. Elastomeric caulk.
62. Steel lintel, see STRUCTURAL.
63. Provide continuous blocking at canopy for anchorage at E.I.F.S.
64. Dampproofing.
65. 4" masonry sill block.
66. ½" rigid insulation

ASHE | BROUSSARD | WEINZETTLE ARCHITECTS

This drawing and design are the property of Ashe Broussard Weinzettle Architects. They are submitted on the condition that they are not to be used, reproduced, or copied, in whole or in part, or used for furnishing information to others, without the prior written consent of Ashe Broussard Weinzettle Architects. All common law rights of copyright and otherwise are hereby specifically reserved.

KEVIN R. BROUSSARD No. 3894 STATE OF LOUISIANA REGISTERED ARCHITECT

REVISIONS

revision	description	date
	-	-
	-	-

RED RIVER BANK

1918 Veterans Boulevard
Metairie, Louisiana 70005

project no. 2021.53
drawn KRB
checked -
project date January 2023

sheet contents: **BUILDING DETAILS**

drawing no. **A8.3**

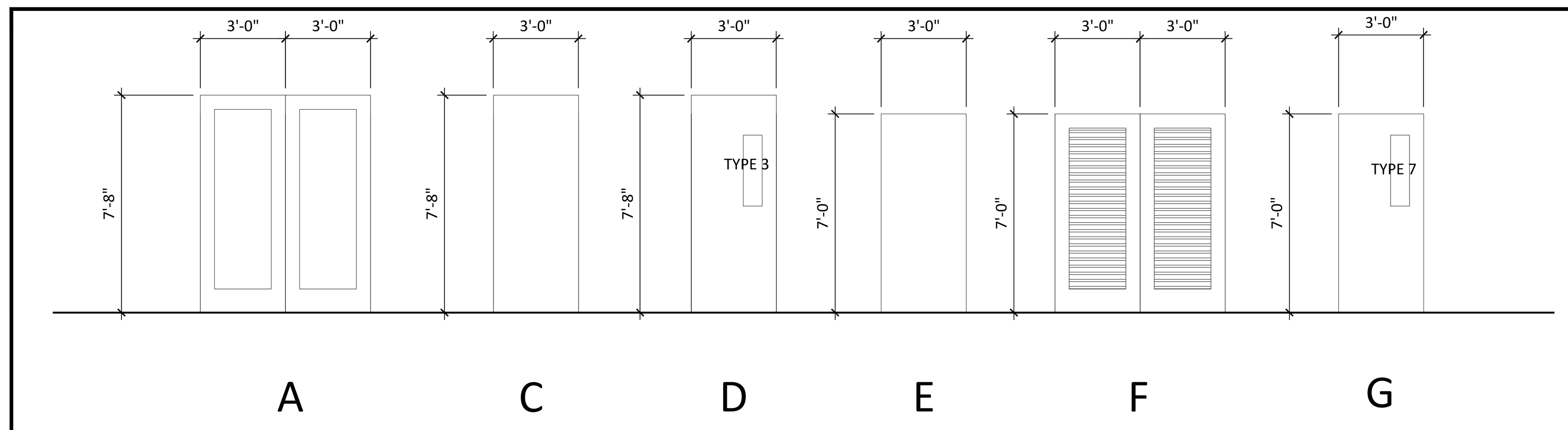

1 DOOR ELEVATIONS
A3.0 | A9.0
SCALE: 1/4" = 1'-0"

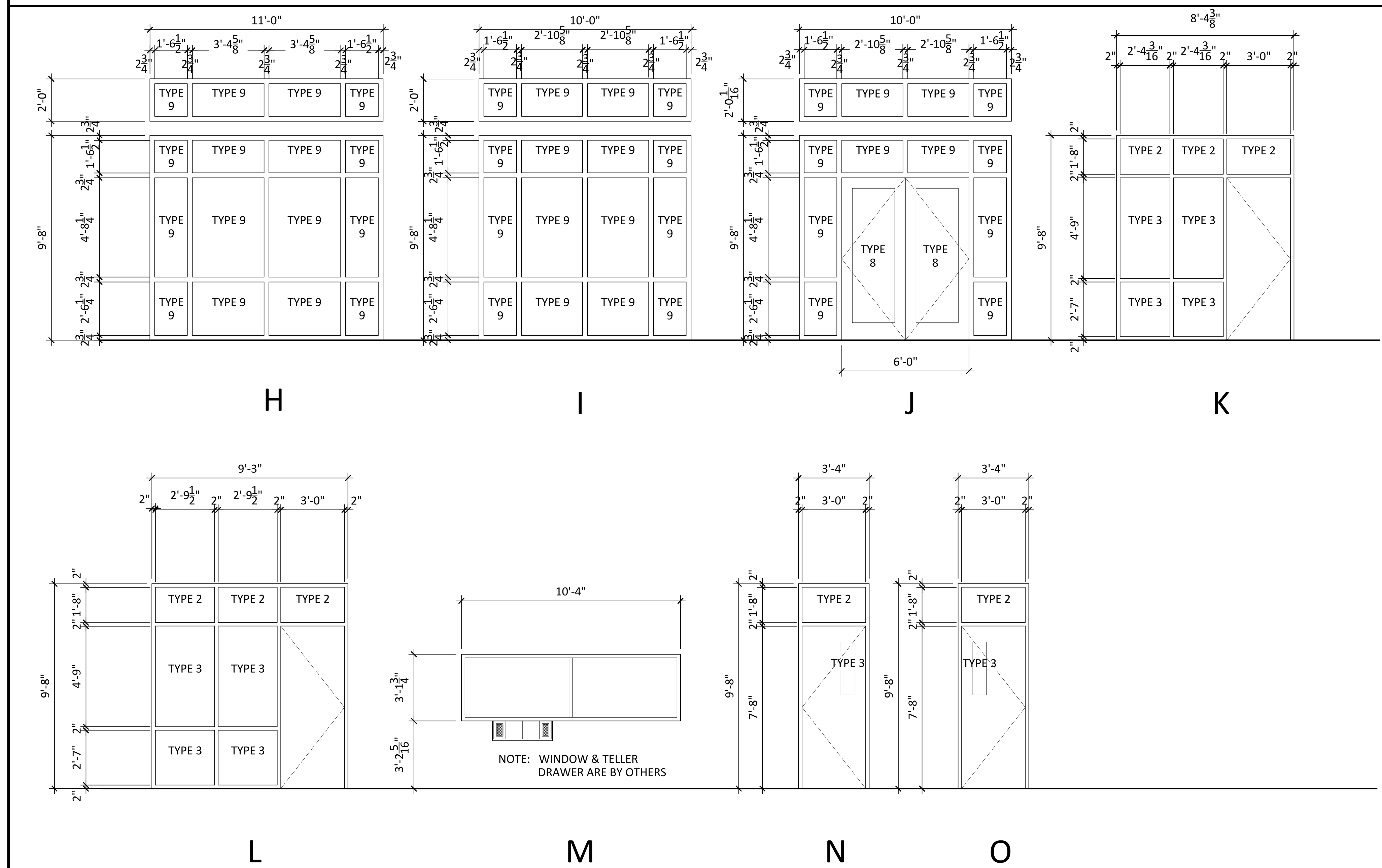

2 WINDOW ELEVATIONS
A3.0 | A9.0
SCALE: 1/4" = 1'-0"

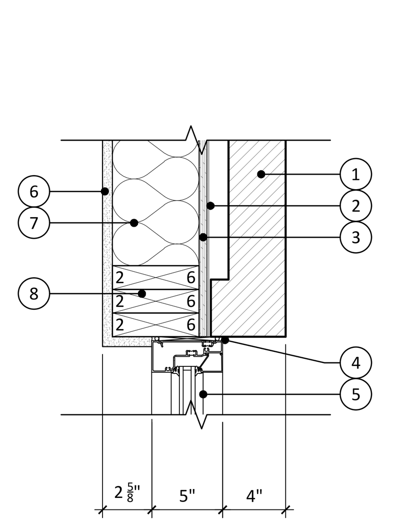

3 JAMB @ EXTERIOR STOREFRONT & C.M.U.
A9.0 | A9.0
SCALE: 1 1/2" = 1'-0"

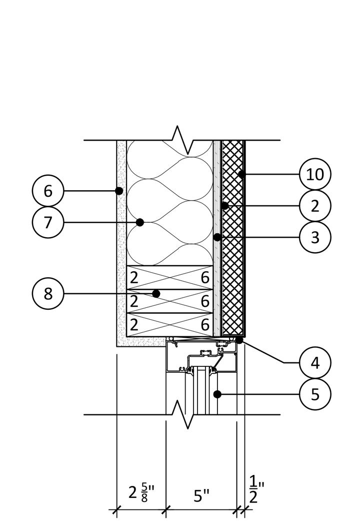

4 JAMB @ EXTERIOR STOREFRONT & E.I.F.S.
A9.0 | A9.0
SCALE: 1 1/2" = 1'-0"

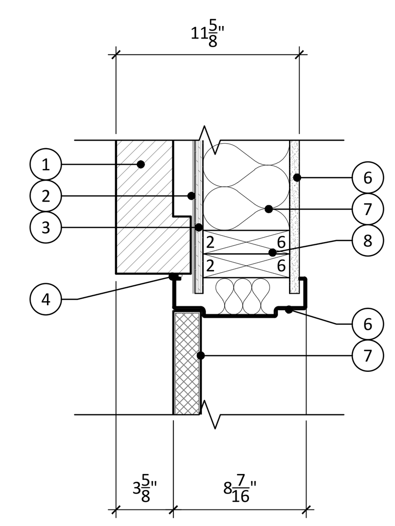

4 JAMB @ EXTERIOR DOOR FRAME & C.M.U.
A9.0 | A9.0
SCALE: 1 1/2" = 1'-0"

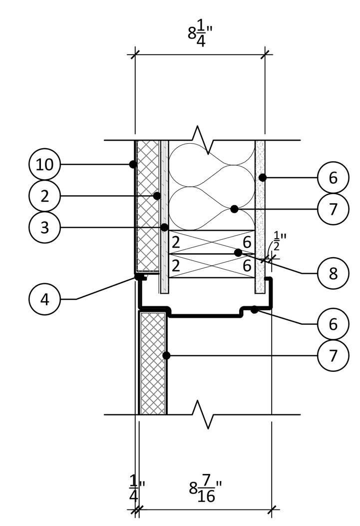

5 JAMB @ EXTERIOR DOOR FRAME & E.I.F.S.
A9.0 | A9.0
SCALE: 1 1/2" = 1'-0"

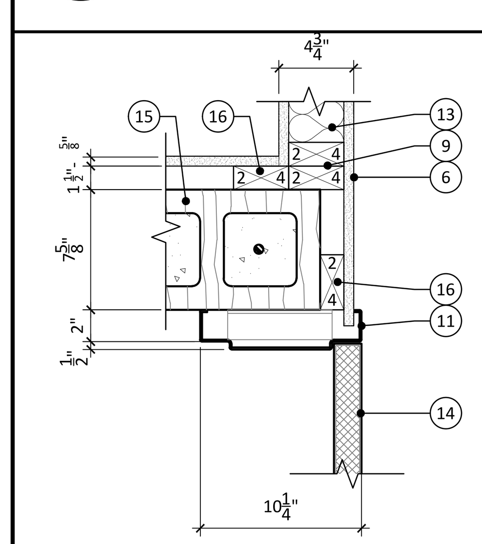

6 JAMB @ ATM 117
A9.0 | A9.0
SCALE: 1 1/2" = 1'-0"

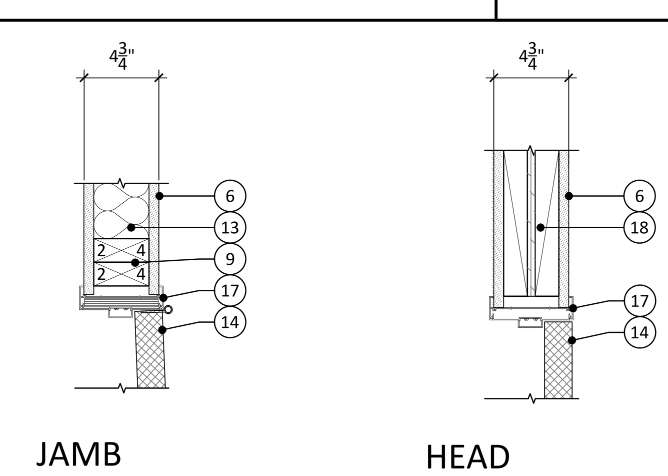

7 INTERIOR ALUM. DOOR FRAME DETAILS @ 4 3/4" WALL
A8.0 | A9.0
SCALE: 1 1/2" = 1'-0"

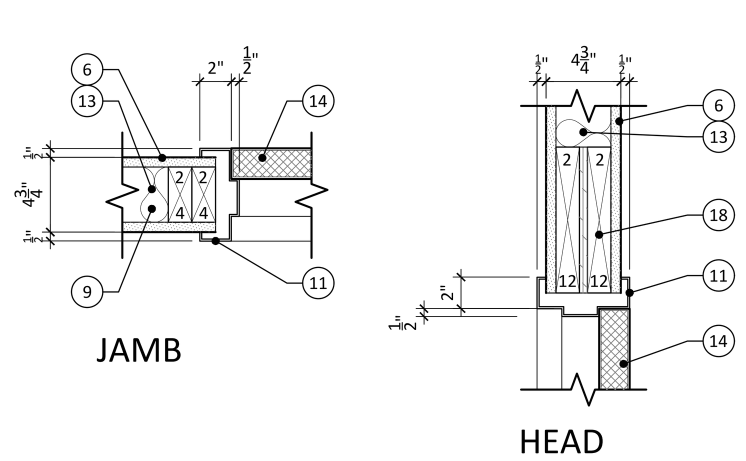

8 INTERIOR H.M. DOOR FRAME DETAILS @ 4 3/4" WALL
A8.0 | A9.0
SCALE: 1 1/2" = 1'-0"

FINISH SCHEDULE

Note: For detailed information on Finish Description such as Carpet, VCT, etc. refer to Specifications.

ROOM NUMBER	NAME	FLOOR	BASE	WALLS	CEILING	CEILING HEIGHT	CEILING MOULD	REMARKS
101	OFFICE	Carpet	1x4 Wood, Stain	Gypsum Board, Paint	Acoustical	13'-6"	none	-
102	CONFERENCE	Carpet	1x4 Wood, Stain	Gypsum Board, Paint	Acoustical	13'-6"	none	-
103	ADMIN. ASSISTANT	Ceramic #1	1x4 Wood, Stain	Gypsum Board, Paint	Acoustical	13'-6"	none	-
104	OFFICE	Carpet	1x4 Wood, Stain	Gypsum Board, Paint	Acoustical	13'-6"	none	-
105	LOBBY	Ceramic #1	1x4 Wood, Stain	Gypsum Board, Paint	Acoustical	13'-6"	none	-
106	WORK AREA	Carpet	4" Resilient	Gypsum Board, Paint	Acoustical	10'-0"	none	-
107	CHECK DESK	Ceramic #1	1x4 Wood, Stain	Gypsum Board, Paint	Acoustical	13'-6"	none	-
108	TELLERS	Carpet	4" Resilient	Gypsum Board, Paint	Acoustical	10'-0"	none	-
109	DRIVE-UP TELLERS	Carpet	4" Resilient	Gypsum Board, Paint	Acoustical	10'-0"	none	-
110	LOBBY	Ceramic #1	1x4 Wood, Stain	Gypsum Board, Paint	Acoustical	13'-6"	none	-
111	WORK AREA	Carpet	4" Resilient	Gypsum Board, Paint	Acoustical	10'-0"	none	
112	VAULT	Carpet	4" Resilient	Gypsum Board, Paint	Acoustical	8'-0"	none	-
113	CASH VAULT	Carpet	4" Resilient	Gypsum Board, Paint	Acoustical	8'-0"	none	-
114	WOMEN	Ceramic #2	1x4 Wood, Stain	Gypsum Board, Paint	Acoustical	10'-0"	none	-
115	MEN	Ceramic #2	1x4 Wood Stain	Gypsum Board, Paint	Acoustical	10'-0"	none	-
116	HALL	Carpet	4" Resilient	Gypsum Board, Paint	Acoustical	10'-0"	none	-
117	ATM	Carpet	4" Resilient	Gypsum Board, Paint	Acoustical	10'-0"	none	No finish flooring at top of equipment pad.
118	I.T. ROOM	Sheet Vinyl	4" Resilient	Gypsum Board, Paint	Acoustical	10'-0"	none	Plywood panels at walls to be painted.
119	BREAK ROOM	Luxury Vinyl Plank	4" Resilient	Gypsum Board, Paint	Acoustical	13'-6"	none	-
120	JANITOR	Sheet Vinyl	4" Resilient	Gypsum Board, Paint	Acoustical	10'-0"	none	-
121	DRIVE-UP LANE	none	none	none	Aluminum Canopy	13'-0"	none	-
122	DRIVE-UP LANE	none	none	none	Aluminum Canopy	13'-0"	none	-
123	VESTIBULE	Luxury Vinyl Plank	4" Resilient	Gypsum Board, Paint	Acoustical	10'-0"	none	Provide transition bar from vinyl plank to carpet.
-	-	-	-	-	-	-	-	-
-	-	-	-	-	-	-	-	-
-	-	-	-	-	-	-	-	-
-	-	-	-	-	-	-	-	-
-	-	-	-	-	-	-	-	-
-	-	-		-	-	-	-	-
-	-	-	-	-	-	-	-	-
-	-	-	-	-	-	-	-	-
-	-	-	-	-	-	-	-	-
-	-	-	-	-	-	-	-	
-	-	-	-	-	-	-	-	-
-	-	-	-	-	-	-	-	-
-	-	-	-	-	-	-	-	-
-	-	-	-	-	-	-	-	-
-	-	-	-	-	-	-	-	-
-	-	-	-	-	-	-	-	-
-	-	-	-	-	-	-	-	-
-	-	-	-	-	-	-	-	-
-	-	-	-	-	-	-	-	-
-	-	-	-	-	-	-	-	-
-	-	-	-	-	-	-	-	-
-	-	-	-	-	-	-	-	-
-	-	-	-	-	-	-	-	-
-	-	-	-	-	-	-	-	-
-	-	-	-	-	-	-	-	-
-	-	-	-	-	-	-	-	-
-	-	-	-	-	-	-	-	-
-	-	-	-	-	-	-	-	-
-	-	-	-	-	-	-	-	-
-	-	-	-	-	-	-	-	-
-	-	-	-	-	-	-	-	-
-	-	-	-	-	-	-	-	-

DETAIL KEYNOTES

1. C.M.U. block veneer.
2. Weather barrier.
3. ½" o.s.b. sheathing.
4. ¼" caulk joint with backer rod & elastomeric caulk.
5. Aluminum storefront framing.
6. ⅝" gypsum sheathing.
7. 6" fiberglass batt insulation.
8. 2x6 wood framing @16" o.c.
9. 2x4 wood framing @ 16" o.c.
10. Synthetic stucco (E.I.F.S.) per 1½" rigid insulation board.
11. Hollow metal frame, paint.
12. Insulated steel door.
13. 3½" fiberglass batt insulation.
14. Solid core wood door.
15. 8x8x16 C.M.U.
16. 1½" furring @ 16" o.c.
17. Aluminum frame.
18. Flitch beam, see STRUCTURAL.

DOOR SCHEDULE

DOOR					FRAME		HARD-WARE	DETAIL	FIRE RATING	REMARKS
MARK	DOOR SIZE	ELEV	DOOR DESCRIPTION	GLASS	FRAME SIZE	FRAME DESCRIPTION				
101	3'-0" X 7'-8" X 1¾"	C	Solid Core Wood Veneer Door, Stain	none	2" x 5¾"	Aluminum	-	7/A9.0	none	-
102	3'-0" X 7'-8" X 1¾"	C	Solid Core Wood Veneer Door, Stain	none	2" x 5¾"	Aluminum	-	7/A9.0	none	-
104	3'-0" X 7'-8" X 1¾"	C	Solid Core Wood Veneer Door, Stain	none	2" x 5¾"	Aluminum	-	7/A9.0	none	-
105	PAIR 3'-0" X 7'-8" X 1¾"	A	Aluminum Storefront, IR	Type 7	2 3/4" x 5 1/4"	Aluminum Storefront	-	3/A9.0	none	-
106	3'-0" X 7'-8" X 1¾"	D	Solid Core Wood Veneer Door, Stain, Vision Panel	Type 3	2" x 5¾"	Aluminum	-	7/A9.0	none	-
111	3'-0" X 7'-8" X 1¾"	D	Solid Core Wood Veneer Door, Stain, Vision Panel	Type 3	2" x 5¾"	Aluminum	-	7/A9.0	none	-
112	3'-0" X 7'-0"	None	Steel Vault Door	none	N. A.	Steel	-	none	none	By Others
113	3'-0" X 7'-0" X 1¾"	E	Solid Core Wood Veneer Door, Stain	none	2" x 5¾"	Aluminum	-	7/A9.0	none	-
114	3'-0" X 7'-0" X 1¾"	E	Solid Core Wood Veneer Door, Stain	none	2" x 5¾"	Hollow Metal, Paint	-	8/A9.0	none	-
115	3'-0" X 7'-0" X 1¾"	E	Solid Core Wood Veneer Door, Stain	none	2" x 5¾"	Hollow Metal, Paint	-	8/A9.0	none	-
117	PAIR 3'-0" X 7'-0" X 1¾"	F	Solid Core Wood Veneer Door, Stain, Louvered	none	2" x 10¼"	Hollow Metal, Paint	-	6/A9.0	none	Frame Head is 4" on one side only, see 5/A8.2
118	3'-0" X 7'-0" X 1¾"	E	Solid Core Wood Veneer Door, Stain	none	2" x 5¾"	Hollow Metal, Paint	-	8/A9.0	none	-
119	3'-0" X 7'-0" X 1¾"	G	Solid Core Wood Veneer Door, Stain, Vision Panel	Type 3	2" x 5¾"	Hollow Metal, Paint	-	8/A9.0	none	-
120	3'-0" X 7'-0" X 1¾"	E	Solid Core Wood Veneer Door, Stain	none	2" x 5¾"	Hollow Metal, Paint	-	8/A9.0	none	-
123	3'-0" X 7'-0" X 1¾"	G	Hollow Metal, IR, Insulated, Paint	Type 3	2" x 8⁷⁄₁₆"	Hollow Metal, Paint	-	4/A9.0	none	Impact Resistant
-	-	-	-	-	-	-	-	-	-	-
-	-	-	-	-	-	-	-	-	-	-
-	-	-	-	-	-	-	-	-	-	-
-	-	-	-	-	-	-	-	-	-	-

GLAZING TYPES

1. ⅛" mirror
2. ¼ clear plate
3. ¼ clear safety
4. ¼ clear wire
5. ¼ tinted plate
6. ¼ tinted safety
7. ⅜" insulated, impact resistant, low E
8. 1" insulated, impact resistant, low E
9. 1 5/16" insulated, impact resistant, low E

WINDOW SCHEDULE

MARK	WINDOW SIZE	DESCRIPTION	DETAIL	GLASS	REMARKS
H	11'-0" X 12'-4"	Aluminum Storefront, IR	3/A9.0 & 4/A9.0	Varies, see 2/A9.0	Window Type "H" is comprized of two(2) separate units, Impact Resistant
I	10'-0" X 12'-4"	Aluminum Storefront, IR	3/A9.0 & 4/A9.0	Varies, see 2/A9.0	Window Type "I" is comprized of two(2) separate units, Impact Resistant
J	10'-0" X 12'-4"	Aluminum Storefront, IR	3/A9.0 & 4/A9.0	Varies, see 2/A9.0	Window Type "J" is comprized of two(2) separate units, Impact Resistant
K	8'-4⅜" X 9'-8"	Aluminum	7/A9.0	Varies, see 2/A9.0	-
L	9'-3" X 9'-8"	Aluminum	7/A9.0	Varies, see 2/A9.0	-
M	3'-1¾" X 10'-4"	Brushed Stainless Steel, IR	1/A8.2	By Window Manufacturer	By Others, see Specifications Appendixes for rough opening requirments.
N	3'-4" X 9'-8"	Aluminum	7/A9.0	Type Z	-
O	3'-4" X 9'-8"	Aluminum	7/A9.0	Type Z	-
-	-	-	-	-	-

ASHE | BROUSSARD | WEINZETTLE ARCHITECTS

This drawing and design are the property of Ashe Broussard Weinzettle Architects. They are submitted on the condition that they are not to be used, reproduced, or copied, in whole or in part, or used for furnishing information to others, without the prior written consent of Ashe Broussard Weinzettle Architects. All common law rights of copyright and otherwise are hereby specifically reserved.

KEVIN R. BROUSSARD No. 3894 STATE OF LOUISIANA REGISTERED ARCHITECT

REVISIONS

revision	description	date
	-	-
	-	-

RED RIVER BANK

1918 Veterans Boulevard
Metairie, Louisiana 70005

project no. 2021.53
drawn KRB
checked
project date January 2023

sheet contents
SCHEDULES
DOOR AND WINDOW ELEVATIONS
& DETAILS

drawing no. A9.0

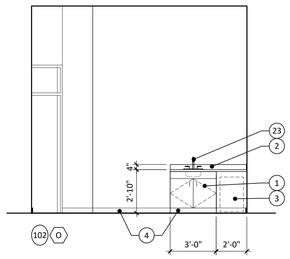

1 CONFERENCE 102
A3.0 A10.0
SCALE: 1/4" = 1'-0"

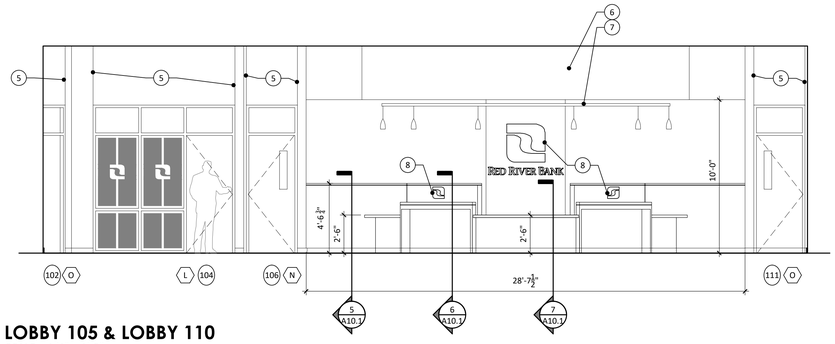

2 LOBBY 105 & LOBBY 110
A3.0 A10.0
SCALE: 1/4" = 1'-0"

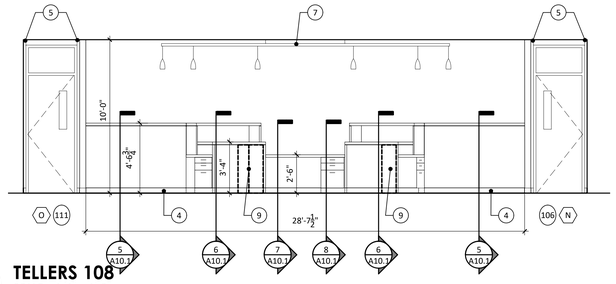

3 TELLERS 108
A3.0 A10.0
SCALE: 1/4" = 1'-0"

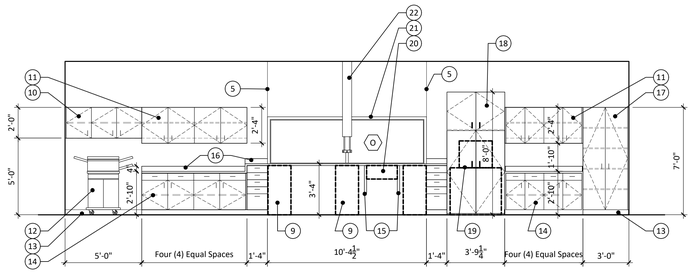

4 WORK AREA 106 / DRIVE-UP TELLERS 109 / WORK AREA 111
A3.0 A10.0
SCALE: 1/4" = 1'-0"

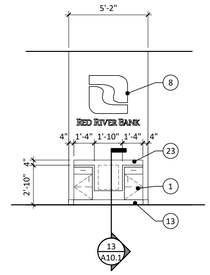

5 TELLERS 108
A3.0 A10.0
SCALE: 1/4" = 1'-0"

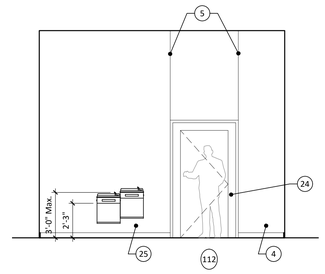

6 LOBBY 110
A3.0 A10.0
SCALE: 1/4" = 1'-0"

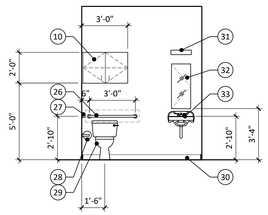

7 WOMEN 114
A3.0 A10.0
SCALE: 1/4" = 1'-0"

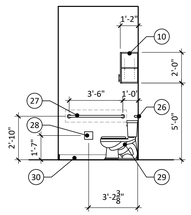

8 WOMEN 114
A3.0 A10.0
SCALE: 1/4" = 1'-0"

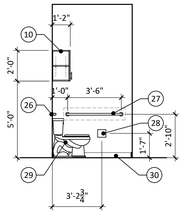

9 MEN 115
A3.0 A10.0
SCALE: 1/4" = 1'-0"

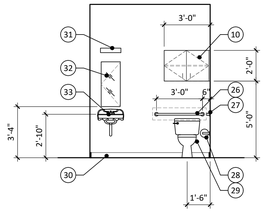

10 MEN 114
A3.0 A10.0
SCALE: 1/4" = 1'-0"

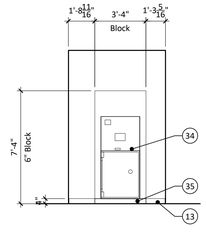

11 ATM 117
A3.0 A10.0
SCALE: 1/4" = 1'-0"

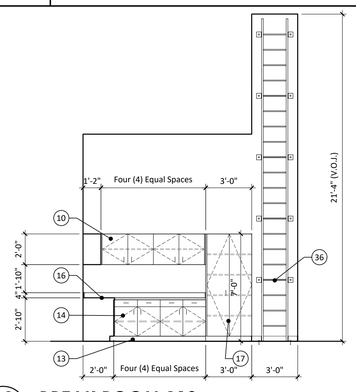

12 BREAK ROOM 119
A3.0 A10.0
SCALE: 1/4" = 1'-0"

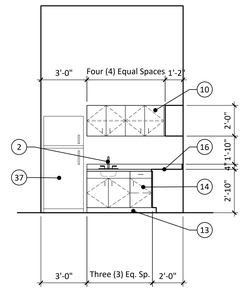

13 BREAK ROOM 119
A3.0 A10.0
SCALE: 1/4" = 1'-0"

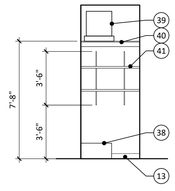

14 JANITOR 120
A3.0 A10.0
SCALE: 1/4" = 1'-0"

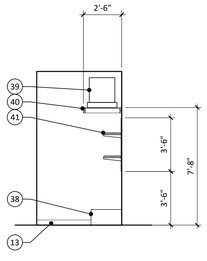

15 JANITOR 120
A3.0 A10.0
SCALE: 1/4" = 1'-0"

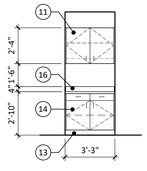

16 CASH VAULT 113
A3.0 A10.0
SCALE: 1/4" = 1'-0"

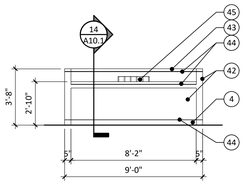

17 CHECK DESK 107
A3.0 A10.0
SCALE: 1/4" = 1'-0"

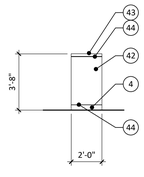

18 CHECK DESK 107
A3.0 A10.0
SCALE: 1/4" = 1'-0"

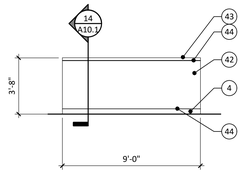

19 CHECK DESK 107
A3.0 A10.0
SCALE: 1/4" = 1'-0"

INTERIOR ELEVATION KEYNOTES

1. Typical base cabinet w/ solid surface top, see detail 12/A10.1.
2. Plumbing fixture, see PLUMBING PLAN.
3. Undercounter refrigerator (N.I.C.).
4. Wood base, see detail 17/A10.1.
5. Drywall expansion joint @ top of frame.
6. Gypsum furring above teller line, see CEILING PLAN.
7. Track mounted pendant lighting fixtures, see LIGHTING PLAN.
8. Aluminum logo (N.I.C.).
9. Undercounter steel teller pedestal cabinet (N.I.C.), see detail 6/A10.1 & manufacturer cut sheets in SPECIFICATION APPENDIXES.
10. Typical upper cabinets, see detail 10/A10.1.
11. Typical upper cabinets w/ light valance, see detail 15/A10.1.
12. Multi-function copier/printer (N.I.C.).
13. 4" resilient base.
14. Typical base cabinet w/ laminate top, see detail 11/A10.1.
15. Laminate covered counter supports.
16. ¾" x 4" laminate splash.
17. Full height storage cabinet, see detail 9/A10.1.
18. Night Depository enclosure, 30" to face, w/ no back in bottom section to fit around night depository, see manufacturer's cut sheets for night depository in SPECIFICATION APPENDIXES.
19. Night Depository (N.I.C.), see manufacturer's cut sheets for night depository in SPECIFICATION APPENDIXES.
20. Teller drawer (N.I.C.), see SPECIFICATION APPENDIXES.
21. Drive-up window (N.I.C.), see SPECIFICATION APPENDIXES.
22. Pneumatic tube system (N.I.C.), see SPECIFICATION APPENDIXES.
23. ½" x 4" solid surface splash.
24. Vault door (N.I.C.), see SPECIFICATION APPENDIXES for manufacturer cut sheets.
25. Water coolers, see PLUMBING PLAN & install per manufacturer's instructions.
26. 36" stainless steel grab bar.
27. 42" stainless steel grab bar.
28. Toilet paper holder (N.I.C.).
29. Toilet fixture, see PLUMBING PLAN.
30. Ceramic wall base.
31. Wall-mounted light fixture, see LIGHTING PLAN.
32. Wall-mounted mirror, see SPECIFICATIONS.
33. Wall-mounted sink, see PLUMBING PLAN.
34. ATM machine (N.I.C.), see SPECIFICATION APPENDIXES for manufacturer data.
35. Concrete equipment pad.
36. Aluminum ladder, see SPECIFICATIONS. Provide blocking in wall for attachment of ladder supports per manufacturer's spacing.
37. Full size refrigerator (N.I.C.).
38. Floor-mounted mop sink, see PLUMBING PLAN.
39. Water heater, see PLUMBING PLAN.
40. Water heater shelf framed of 2x4 wood studs & ¾" plywood. Paint all to match wall.
41. ½" melamine shelving on adjustable KV standards & brackets.
42. Plastic laminate on ¾" plywood construction.
43. ½" solid surface on ½" plywood substrate.
44. ¼" route joint, painted black.
45. Deposit slip caddy, see detail 16/A10.1.

ASHE | BROUSSARD | WEINZETTLE ARCHITECTS

This drawing and design are the property of Ashe Broussard Weinzettle Architects. They are submitted on the condition that they are not to be used, reproduced, or copied, in whole or in part, or used for furnishing information to others, without the prior written consent of Ashe Broussard Weinzettle Architects. All common law rights of copyright and otherwise are hereby specifically reserved.

KEVIN R. BROUSSARD No. 3894 STATE OF LOUISIANA REGISTERED ARCHITECT

REVISIONS

revision	description	date
	-	-
	-	-

RED RIVER BANK

1918 Veterans Boulevard
Metairie, Louisiana 70005

project no. 2021.53
drawn KRB
checked -
project date January 2023

sheet contents: INTERIOR ELEVATIONS

drawing no. A10.0

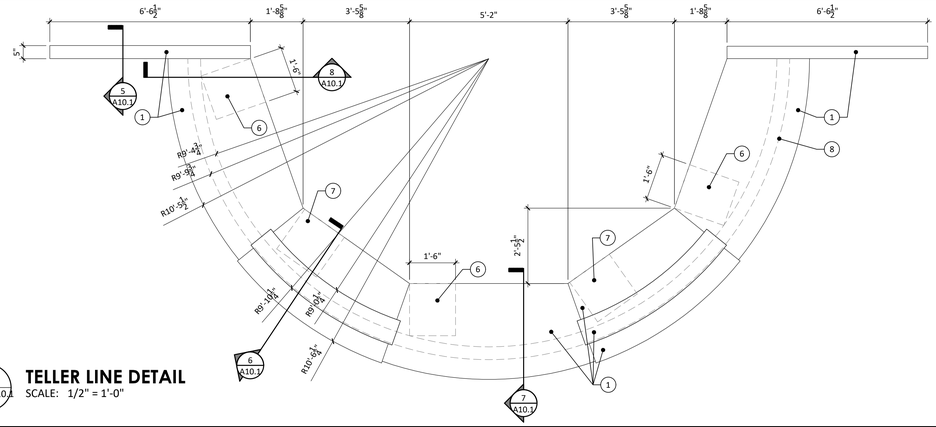

1 TELLER LINE DETAIL
A3.0 | A10.1 SCALE: 1/2" = 1'-0"

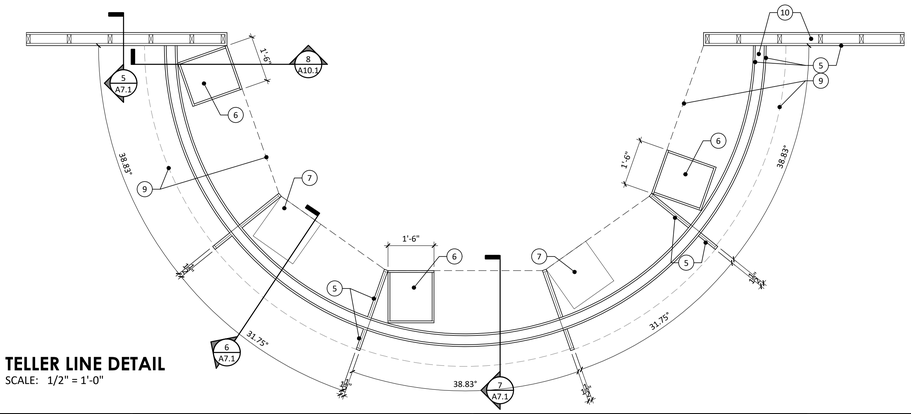

2 TELLER LINE DETAIL
A3.0 | A10.1 SCALE: 1/2" = 1'-0"

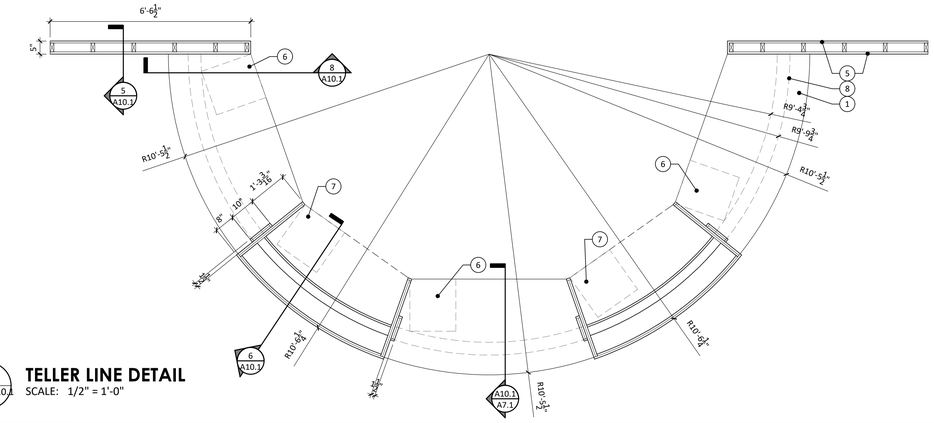

3 TELLER LINE DETAIL
A3.0 | A10.1 SCALE: 1/2" = 1'-0"

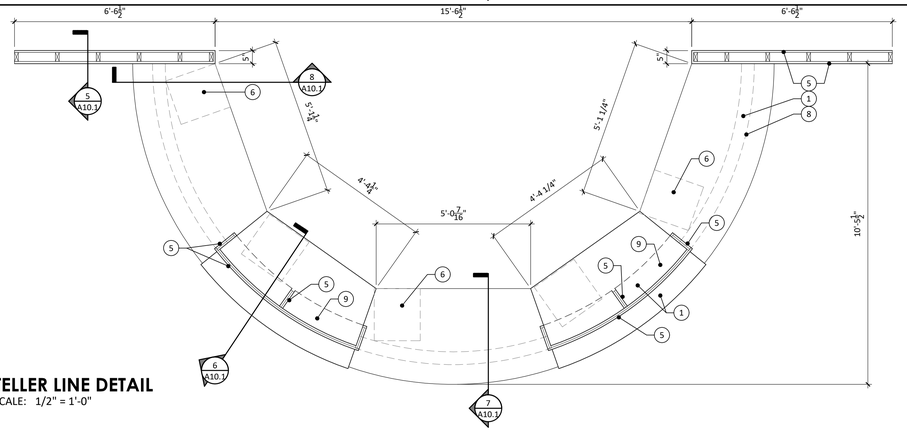

4 TELLER LINE DETAIL
A3.0 | A10.1 SCALE: 1/2" = 1'-0"

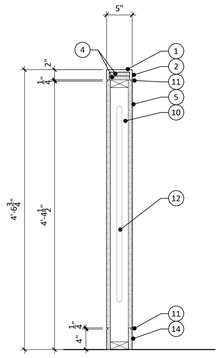

5 TELLER LINE DTL.
A10.1 | A10.1 SCALE: 1" = 1'-0"

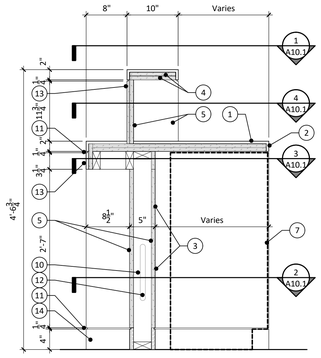

6 TELLER LINE DETAIL
A10.1 | A10.1 SCALE: 1" = 1'-0"

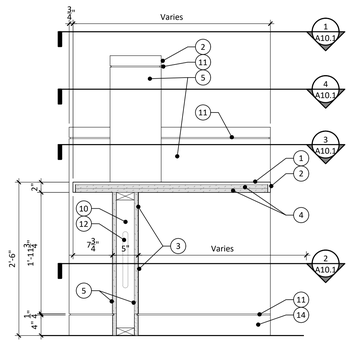

7 TELLER LINE DETAIL
A10.1 | A10.1 SCALE: 1" = 1'-0"

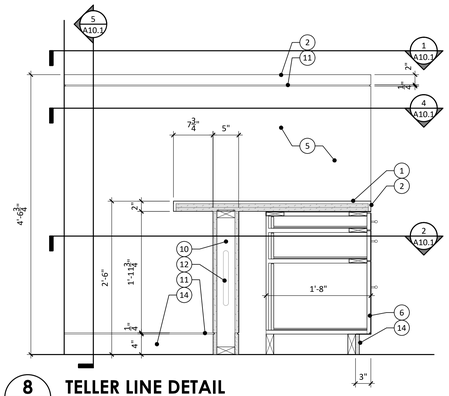

8 TELLER LINE DETAIL
A10 | A10.1 SCALE: 1" = 1'-0"

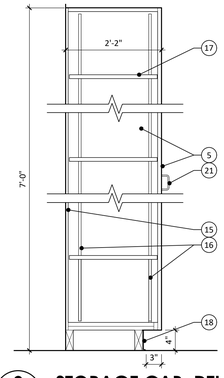

9 STORAGE CAB. DTL.
A10 | A10.1 SCALE: 1" = 1'-0"

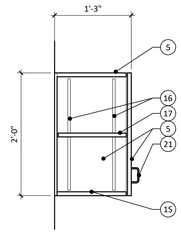

11 WALL CAB.
A10.1 | A10.1 SCALE: 1" = 1'-0"

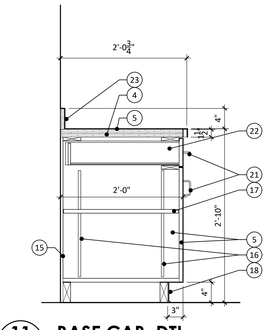

11 BASE CAB. DTL.
A10.1 | A10.1 SCALE: 1" = 1'-0"

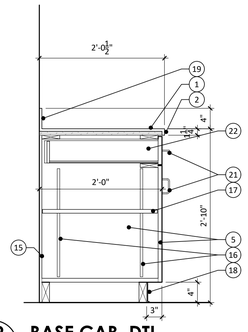

12 BASE CAB. DTL.
A10.1 | A10.1 SCALE: 1" = 1'-0"

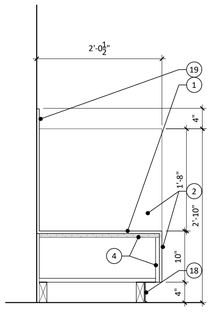

13 PRINTER WELL DET.
A10.1 | A10.1 SCALE: 1" = 1'-0"

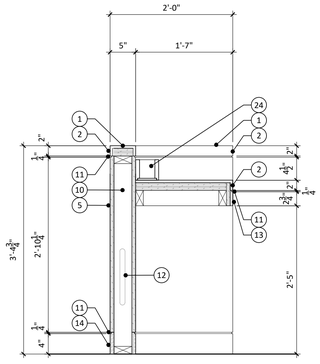

14 CHECK DESK DETAIL
A10 | A10.1 SCALE: 1" = 1'-0"

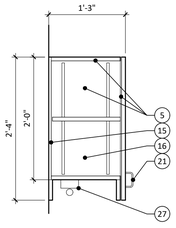

15 WALL CABINET W/ LIGHT VALENCE
A10 | A10.1 SCALE: 1" = 1'-0"

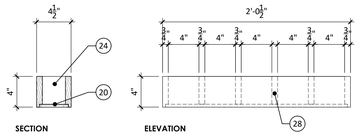

Note: Caddy is not to be connected to desk.

16 DEPOSIT SLIP CADDY DETAIL
A10.1 | A10.1 SCALE: 1 1/2" = 1'-0"

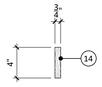

17 WOOD BASE DETAIL
A10.1 | A10.1 SCALE: 1 1/2" = 1'-0"

KEYNOTES

1. 1/4" solid surface top.
2. 1/4" solid surface edging.
3. Removable panel.
4. 3/4" plywood substrate.
5. Plastic laminate on 3/4" plywood substrate.
6. Casework drawer pedestal.
7. New undercounter steel teller pedestal cabinet (N.I.C.).
8. Support wall below.
9. Countertop edge above.
10. 2 x 4 framing at wall interior as required.
11. 1/4" x 1/4" routed joint, paint black.
12. Provide raceway within stud cavity for power and data conduit.
13. Plastic laminate on 1/2" plywood substrate.
14. 3/4" x 4" walnut wood base, stain.
15. 1/4" cabinet back with cabinet liner finish.
16. KV standards and brackets or line-bore with brackets.
17. 3/4" plywood shelves with cabinet liner finish, edge banded.
18. 4" resilient base.
19. 1/4" x 4" solid surface splash.
20. 1/2" plywood bottom, walnut veneer.
21. Metal cabinet pull, see Specifications.
22. Typical drawer construction, see Specifications.
23. 3/4" x 4" plastic laminate splash on plywood substrate.
24. Deposit slip caddy of 3/4" wood, walnut lumber, stain.
25. Anchor 2 x 4 frame at side walls.
26. Base type varies by location.
27. Light fixture, see Lighting Plan.
28. 3/4" walnut lumber dividers as indicated, stain.

ASHE | BROUSSARD | WEINZETTLE ARCHITECTS

This drawing and design are the property of Ashe Broussard Weinzettle Architects. They are submitted on the condition that they are not to be used, reproduced, or copied, in whole or in part, or used for furnishing information to others, without the prior written consent of Ashe Broussard Weinzettle Architects. All common law rights of copyright and otherwise are hereby specifically reserved.

KEVIN R. BROUSSARD No. 3894 STATE OF LOUISIANA REGISTERED ARCHITECT

REVISIONS

revision	description	date
	-	-
	-	-

RED RIVER BANK

1918 Veterans Boulevard
Metairie, Louisiana 70005

project no. 2021.53
drawn KRB
checked
project date January 2023

sheet contents: INTERIOR ELEVATIONS & DETAILS

drawing no. A10.1

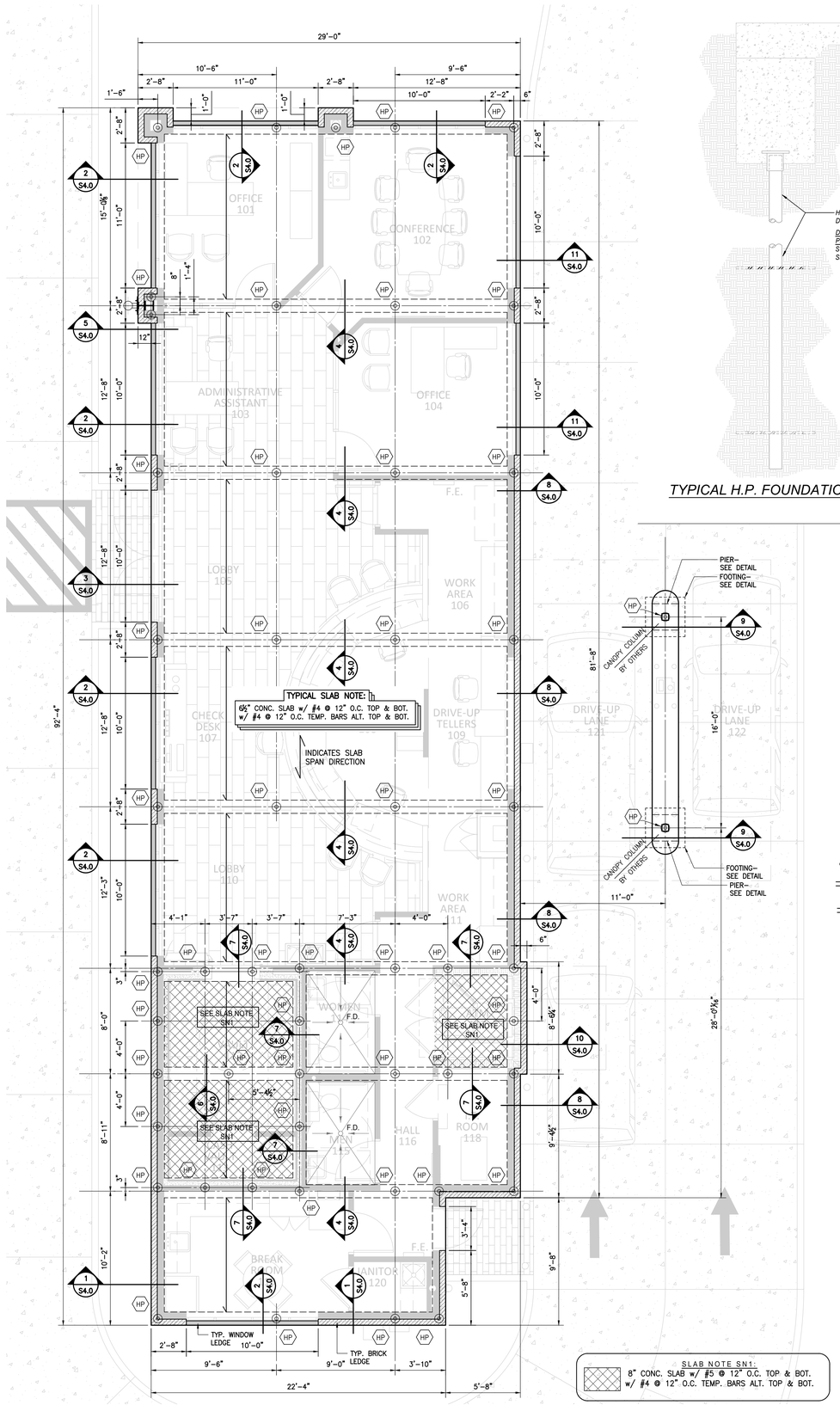

FOUNDATION PLAN

SCALE: 1/4" = 1'-0"

SLAB NOTE SN1:
8" CONC. SLAB w/ #5 @ 12" O.C. TOP & BOT. w/ #4 @ 12" O.C. TEMP. BARS ALT. TOP & BOT.

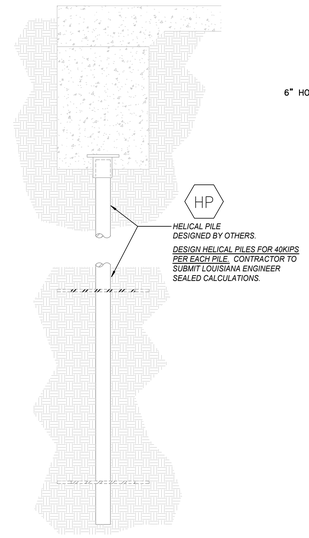

TYPICAL H.P. FOUNDATION DETAIL

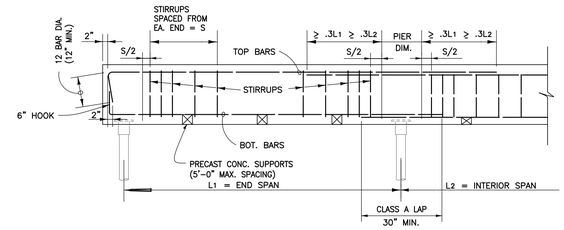

TYPICAL BEAM DETAIL

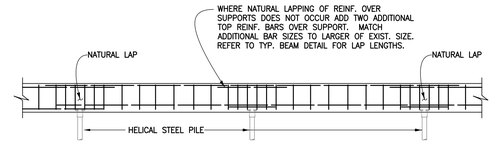

TYPICAL TOP BAR REINF. DETAIL

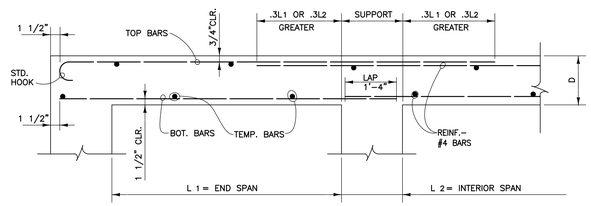

TYPICAL SLAB DETAIL

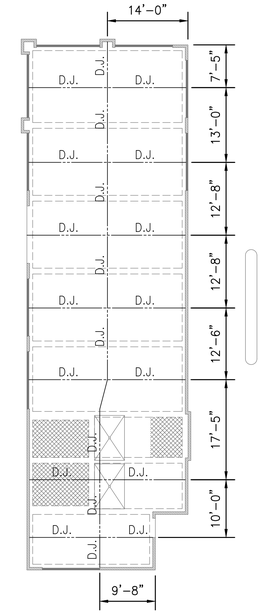

SLAB JOINT LAYOUT PLAN

SLAB NOTE:

- MONOLITHIC SLAB POUR IS RECOMMENDED.
- IF MULTI-STAGE SLAB POUR IS USED, PLACE CONSTRUCTION JOINTS AS REQUIRED.
- CONTRACTOR TO DETERMINE METHOD AND COORDINATE WITH SUB-CONTRACTORS.

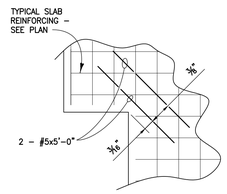

TYPICAL CORNER BAR DETAIL AT INSIDE SLAB CORNER

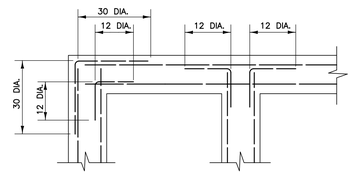

TYPICAL CORNER REINFORCING

(FOR ALL REINFORCED CONCRETE BEAMS)

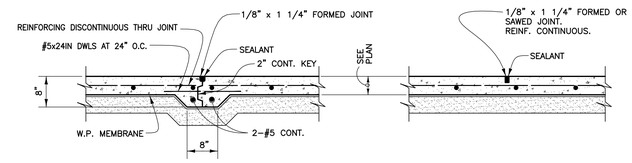

CONSTRUCTION JOINT DETAIL (C.J.)

CONTRACTION JOINT DETAIL (D.J.)

NOTE:
SAW CUTTING SHALL BE DONE WITHIN 4 HOURS OF CONCRETE PLACEMENT

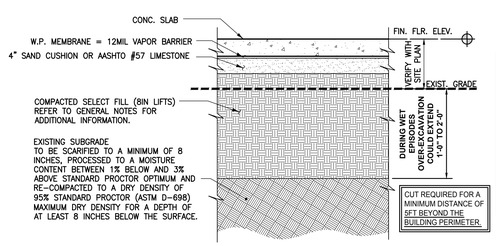

TYPICAL SLAB & SUBGRADE DETAIL

GEOTECHNICAL REPORT NOTES:

- IF INSTABILITY PERSISTS WITH THE EXPOSED SUBGRADE AT THE BOTTOM OF THE BUILDING PAD EXCAVATION, THE AREA MAY REQUIRE OVER-EXCAVATION OF THE WET MATERIAL TO PROVIDE A SINGLE OVER-SIZED BRIDGE LIFT OF DRIER MATERIAL (SEE GENERAL NOTES & GEOTECHNICAL REPORT FOR ADDITIONAL INFORMATION).
- RECOMMENDATION FOR CONSTRUCTION TO TAKE PLACE DURING A WARMER AND DRIER TIME OF YEAR.
- UTILITIES WHICH PROJECT THROUGH THE SLAB ON GRADE SHOULD BE DESIGNED WITH EITHER SOME DEGREE OF FLEXIBILITY OR WITH SLEEVES.

GRADE BEAM FORMING NOTE:

- EARTH FORMED GRADE BEAMS ARE NOT ALLOWED.
- CONTRACTOR TO DETERMINE METHOD AND COORDINATE WITH SUB-CONTRACTORS.

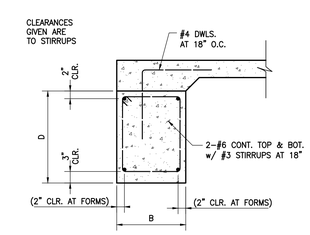

TYPICAL PERIMETER BEAM SECTION

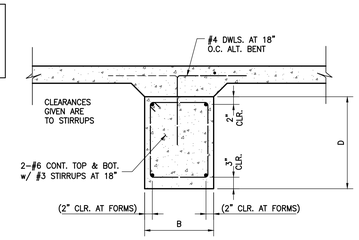

TYPICAL INTERIOR BEAM SECTION

ADDITIONAL NOTES FOR CONCRETE SLAB:

1. **CONCRETE MIX DESIGN**
   A. 3,000 PSI, TYPE 1 PORTLAND CEMENT MEETING ASTM C150.
   B. NORMAL WEIGHT AGGREGATES MEETING ASTM C33
2. **VAPOR BARRIER**
   A. 12MIL MINIMUM THICKNESS.
   B. STEGO INDUSTRIES - STEGO WRAP VAPOR BARRIER OR EQUAL.
   C. LAP AND TAPE JOINTS PER MANUFACTURERS RECOMMENDATIONS.
   D. STEGO INDUSTRIES OR EQUAL - USE TAP/SEAL PRODUCTS FOR SEALING SEAMS AND PENETRATIONS.
3. **FLOOR FINISH**
   A. REFER TO ARCHITECTURAL DRAWINGS.
4. **CURING COMPOUNDS**
   A. LIQUID MEMBRANE-FORMING CURING COMPOUND, SCOFIELD - LITHOCHROME COLORWAX OR EQUAL.
   B. CONFORM TO ASTM C309.
5. **SAW CUTTING**
   A. SAW CUTTING SHALL BE DONE WITHIN 4 HOURS OF CONCRETE PLACEMENT.
6. **CONCRETE SLAB**
   A. FLOOR LEVELNESS REQUIREMENTS FL OF 35.
   B. FLOOR FLATNESS REQUIREMENTS FF OF 25.

BLUDOT ENGINEERING
P.O. Box 286
Benton, Louisiana 71006
Voice 318.402.4640
Fax 318.383.6667
www.bludotengineering.com

ASHE | BROUSSARD | WEINZETTLE ARCHITECTS

This drawing and design are the property of Ashe Broussard Weinzettle Architects. They are submitted on the condition that they are not to be used, reproduced, or copied, in whole or in part, or used for furnishing information to others, without the prior written consent of Ashe Broussard Weinzettle Architects. All common law rights of copyright and otherwise are hereby specifically reserved.

STATE OF LOUISIANA
JASON E. COTTOM
License. No. 39437
PROFESSIONAL ENGINEER IN
Civil Engineering
04/28/2023

REVISIONS

revision	description	date
	-	-
	-	-

RED RIVER BANK
1918 Veterans Boulevard
Metairie, Louisiana 70005

project no. 2021.53
drawn J.E.C.
checked J.E.C.
project date April 2023

sheet contents: **FOUNDATION PLAN**

drawing no. **S1.0**

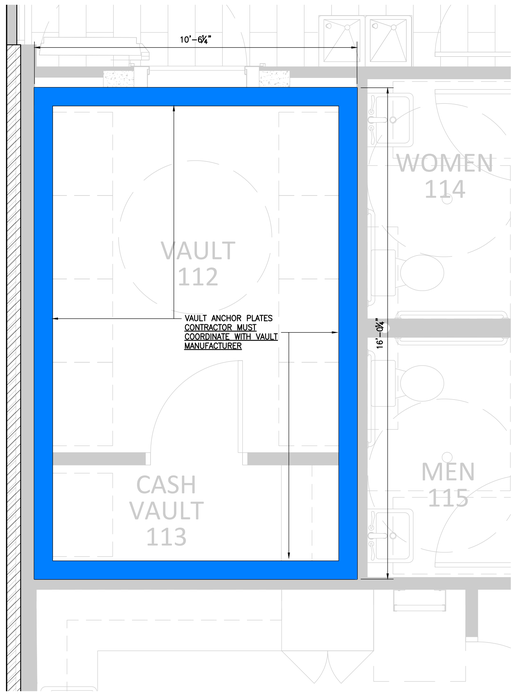

N

VAULT ANCHOR PLATE PLAN SCALE: 1/2" = 1'-0"

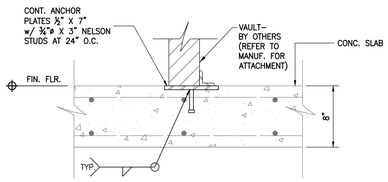

MANUFACTURER RECOMMENDATIONS:

- PLATES MUST BE INSTALLED LEVEL IN THE FLOOR BEFORE CONCRETE POUR.
- VAULT DOOR OPENING SHALL HAVE TWO ¾" AIR HOLES
- VAULT & VAULT DOOR CANNOT BE INSTALLED PROPERLY IF THESE CONDITIONS ARE NOT MET.
- ALL CORRECTIONS MUST BE MADE PRIOR TO VAULT INSTALLATION AT THE EXPENSE OF THE GENERAL CONTRACTOR.
- FORCING PLATES AFTER CONCRETE POUR CAN CAUSE AIR POCKETS AND UNEVEN PLATES.

VAULT CONNECTION PLATE DETAIL

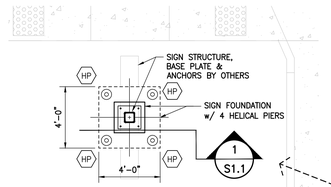

N

SIGN FOUNDATION PLAN SCALE: 1/4" = 1'-0"

NOTE:
G.C. TO VERIFY SIGN
LOCATION WITH SITE PLAN.

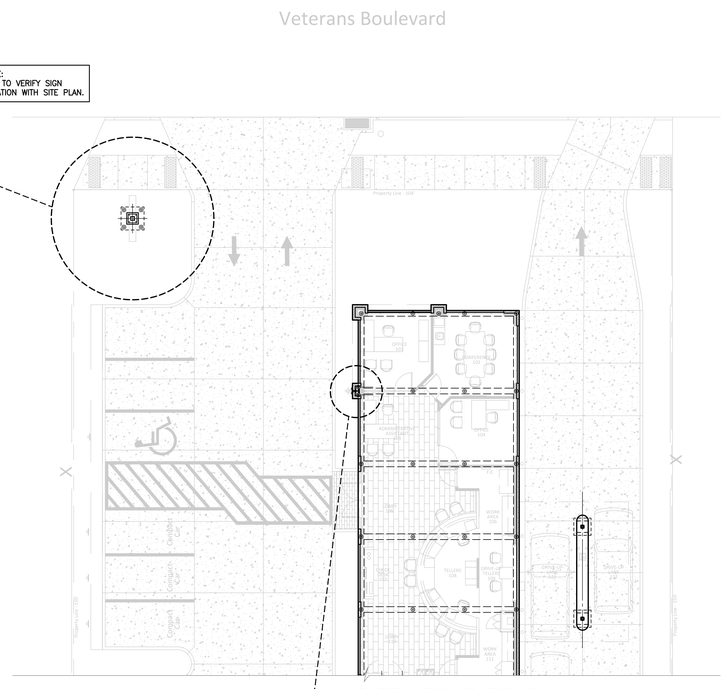

PARTIAL FOUNDATION PLAN

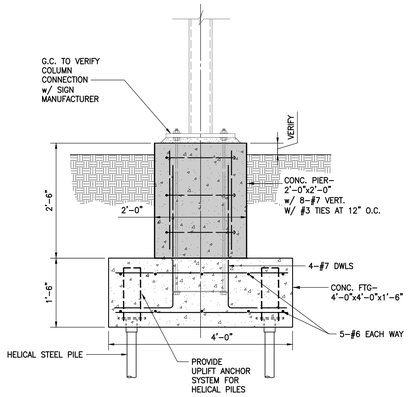

SECTION 1 / S1.1
SCALE: 3/4"=1'-0"

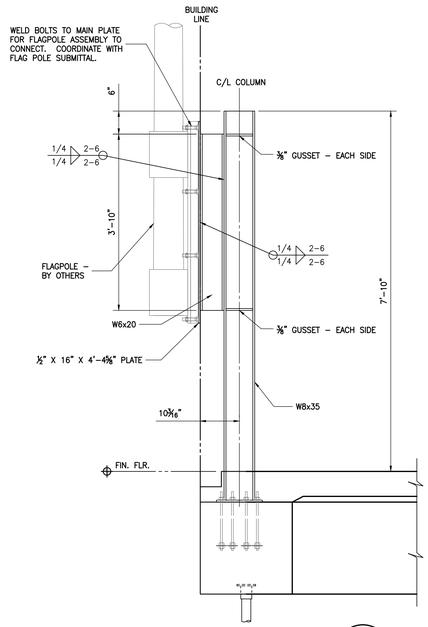

SECTION 2 / S1.1
SCALE: 3/4"=1'-0"

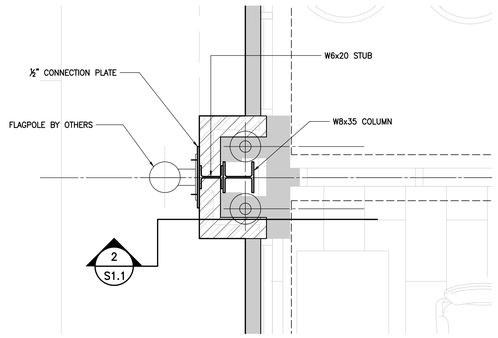

N

FLAGPOLE SUPPORT COLUMN
ENLARGED FOUNDATION PLAN SCALE: 3/4" = 1'-0"

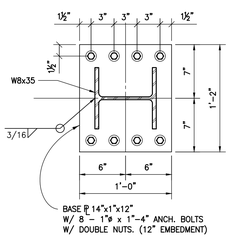

W8x35 BASE PLATE DETAIL
SCALE: 1 1/2" = 1'-0"

BLUDOT ENGINEERING
P.O. Box 286
Benton, Louisiana 71006
Voice 318.402.4640
Fax 318.383.6667
www.bludotengineering.com

ASHE | BROUSSARD | WEINZETTLE ARCHITECTS

This drawing and design are the property of Ashe Broussard Weinzettle Architects. They are submitted on the condition that they are not to be used, reproduced, or copied, in whole or in part, or used for furnishing information to others, without the prior written consent of Ashe Broussard Weinzettle Architects. All common law rights of copyright and otherwise are hereby specifically reserved.

STATE OF LOUISIANA
JASON E. COTTON
License. No. 39437
PROFESSIONAL ENGINEER
IN
Civil Engineering
04/28/2023

REVISIONS

revision	description	date
	-	-
	-	-

RED RIVER BANK

1918 Veterans Boulevard
Metairie, Louisiana 70005

project no. 2021.53
drawn J.E.C.
checked J.E.C.
project date April 2023

sheet contents
VAULT ANCHOR PLAN & SIGN FOUNDATION PLAN & FLAGPOLE SUPPORT

drawing no. S1.1

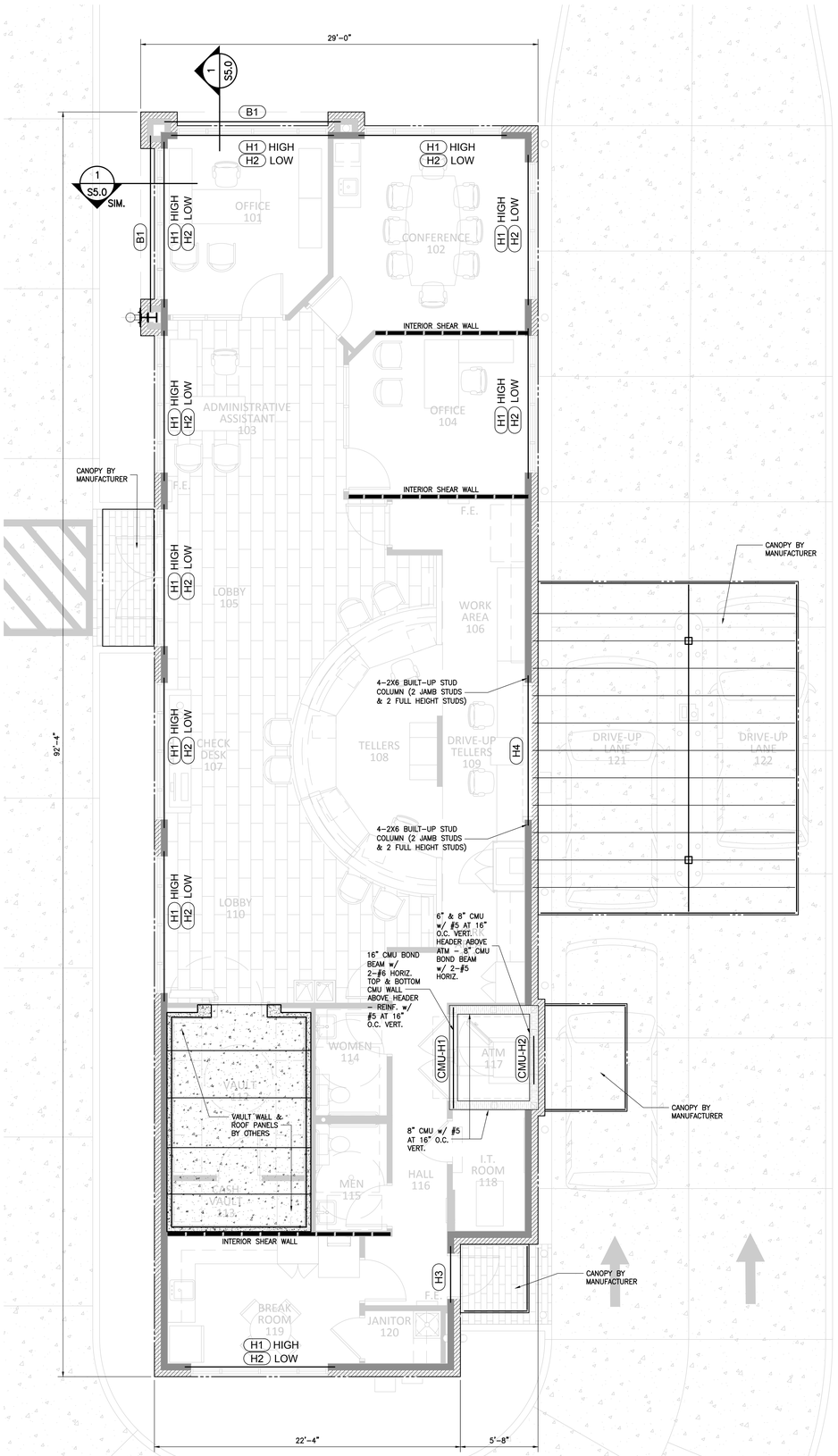

INTERMEDIATE FRAMING PLAN SCALE: 1/4" = 1'-0"

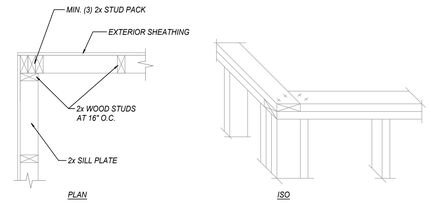

TYPICAL CORNER DETAIL

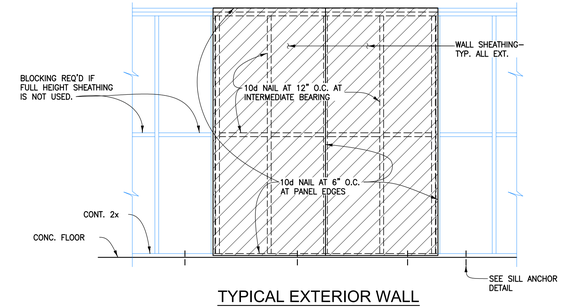

TYPICAL EXTERIOR WALL

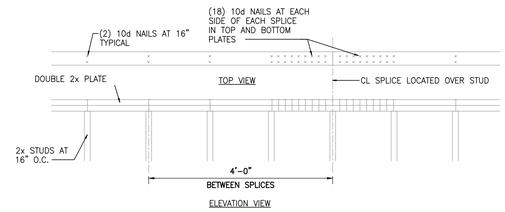

TYPICAL TOP PLATE LAP DETAIL

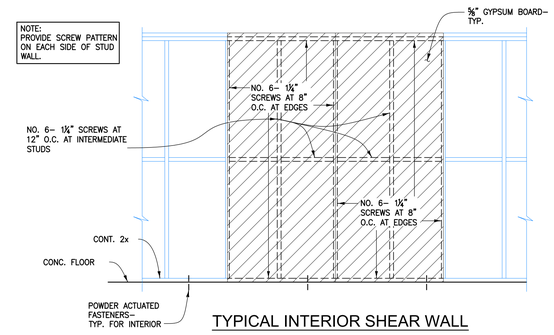

TYPICAL INTERIOR SHEAR WALL

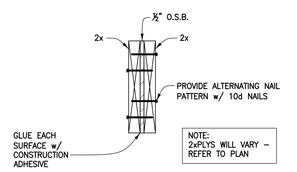

TYPICAL FLITCH BEAM DETAIL

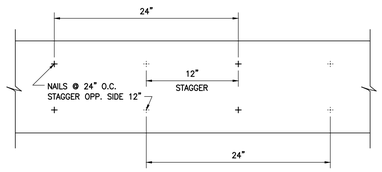

ALTERNATING NAIL PATTERN DETAIL

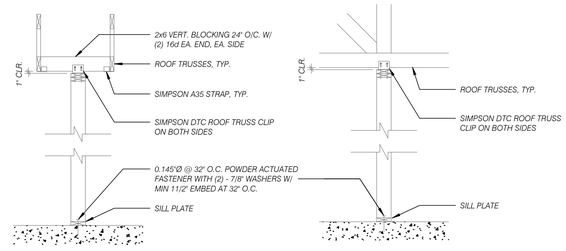

INTERIOR NON-LOAD BEARING WALL CONNECTION DETAILS

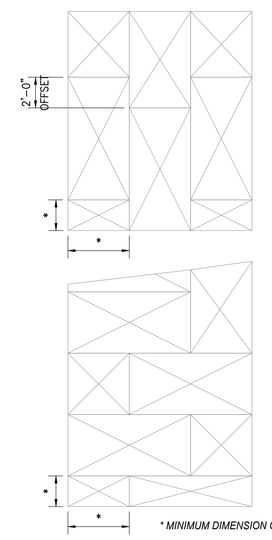

* MINIMUM DIMENSION OF ANY SHEET

TYPICAL SHEET LAY-OUTS

INTERMEDIATE FRAMING LEGEND

= EXTERIOR SHEAR WALL
= INTERIOR SHEAR WALL

HEADER LEGEND

H1	=	(3)-1.75x18 LVL 2.0 3100 SP (CUT DEPTH TO 17")
H2	=	(3)-1.75x9.25 LVL 2.0 3100 SP (CUT DEPTH TO 7.5")
H3	=	(3)-2x12 S.P. NO. 2 w/ ½" PLYWOOD FLITCH
H4	=	(3)-1.75x18 LVL 2.0 3100 SP
CMU-H1	=	16" CMU BOND BEAM
CMU-H2	=	8" CMU BOND BEAM

BEAM LEGEND

B1	=	(3)-1.75x18 LVL 2.0 3100 SP + BENT PLATE

BLUDOT ENGINEERING
P.O. Box 286
Benton, Louisiana 71006
Voice 318.402.4640
Fax 318.383.4657
www.bludotengineering.com

ASHE | BROUSSARD | WEINZETTLE ARCHITECTS

This drawing and design are the property of Ashe Broussard Weinzettle Architects. They are submitted on the condition that they are not to be used, reproduced, or copied, in whole or in part, or used for furnishing information to others, without the prior written consent of Ashe Broussard Weinzettle Architects. All common law rights of copyright and otherwise are hereby specifically reserved.

STATE OF LOUISIANA
JASON E. COTTOM
License. No. 39437
PROFESSIONAL ENGINEER
IN
Civil Engineering
04/28/2023

REVISIONS

revision	description	date
	-	-
	-	-

RED RIVER BANK

1918 Veterans Boulevard
Metairie, Louisiana 70005

project no.	2021.53
drawn	J.E.C.
checked	J.E.C.
project date	April 2023
drawing no.	S2.0

sheet contents
INTERMEDIATE FRAMING PLAN

NOTE:
ALL TRUSS/BEARING WALL CONNECTIONS SHALL BE DONE WITH SIMPSON HURRICANE TIES OR HEAVY GIRDER TIEDOWN (IF REQUIRED) OR EQUIVALENT.
TRUSS MANUFACTURER TO PROVIDE AND DESIGN ALL HURRICANE TIES AND HEAVY GIRDER TIEDOWNS TO COMPLY WITH REACTIONS DETERMINED FROM GIVEN LOAD REQUIREMENTS.
CONNECTION DETAILS SHALL BE PROVIDED WITH TRUSS SHOP DRAWINGS.

NOTE FOR ALL TRUSSES:

- METAL PLATE CONNECTED WOOD TRUSSES AT 24" O.C.
- APPLIED PRESSURES
  DL ROOF T.C.=10psf
  DL ROOF B.C.=10psf
  LL ROOF T.C.=20psf
  LL ROOF B.C.=5psf
- SHOP DRAWINGS AND CALCULATIONS STAMPED BY A PROFESSIONAL ENGINEER REGISTERED IN THE STATE OF LOUISIANA MUST BE SUBMITTED.

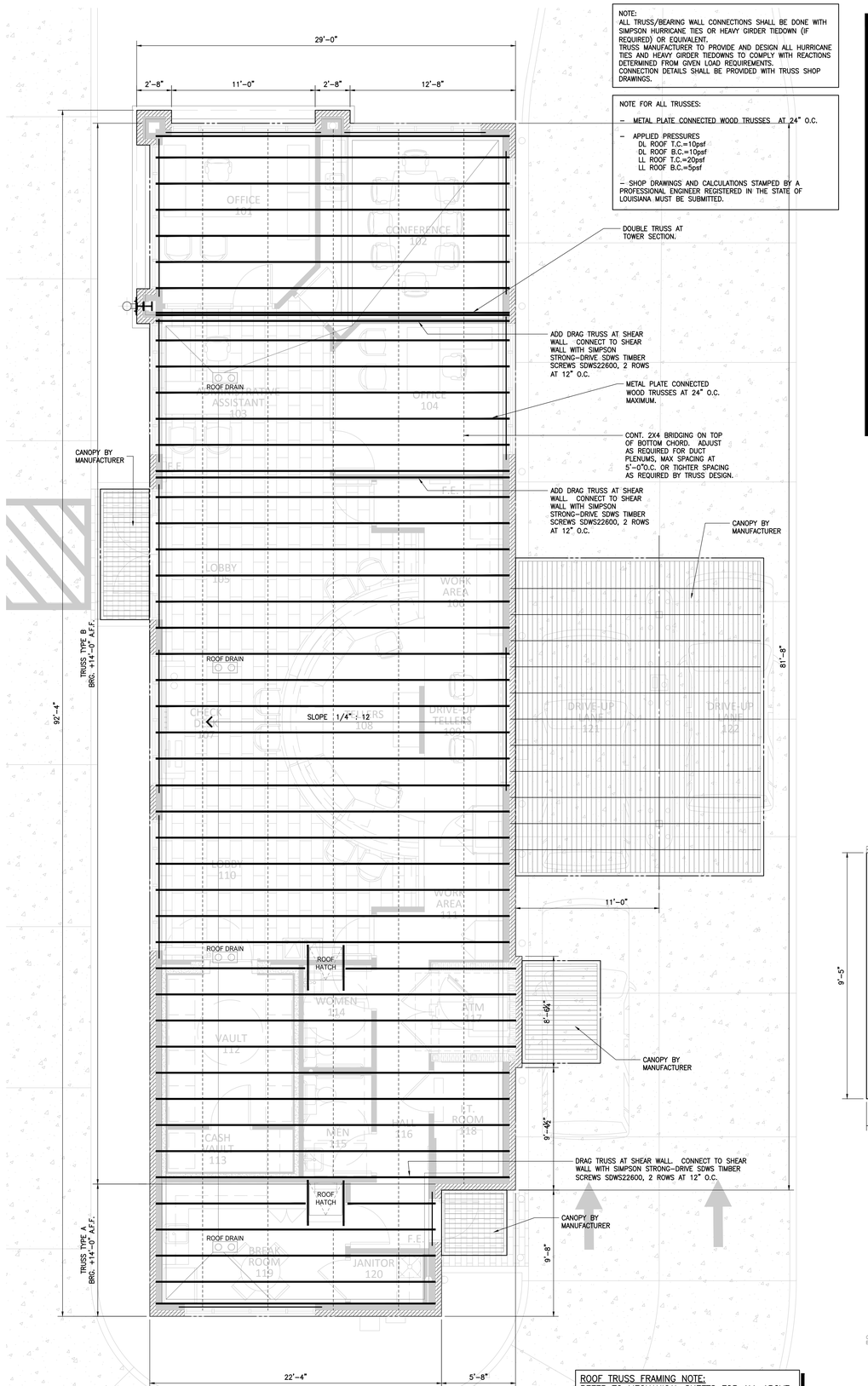

ROOF FRAMING PLAN SCALE: 1/4" = 1'-0"

ROOF TRUSS FRAMING NOTE:
REFER TO MECHANICAL SHEETS FOR ALL ABOVE CEILING ITEMS. COORDINATE ALL TRUSS WEBS TO FRAME AROUND MECHANICAL ITEMS. DESIGN TRUSS WITH ADDITIONAL BOTTOM CHORD DEAD LOAD FROM MECHANICAL ITEMS.

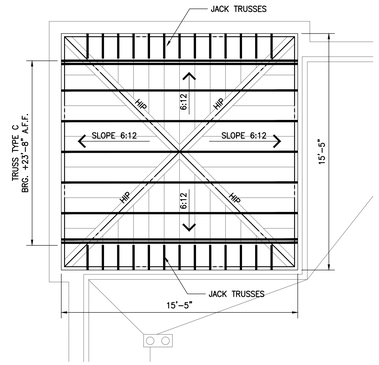

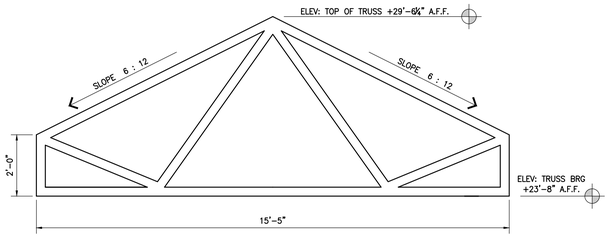

TRUSS TYPE C SCALE: 1/2" = 1'-0"

N

ROOF FRAMING PLAN - TOWER SCALE: 1/4" = 1'-0"

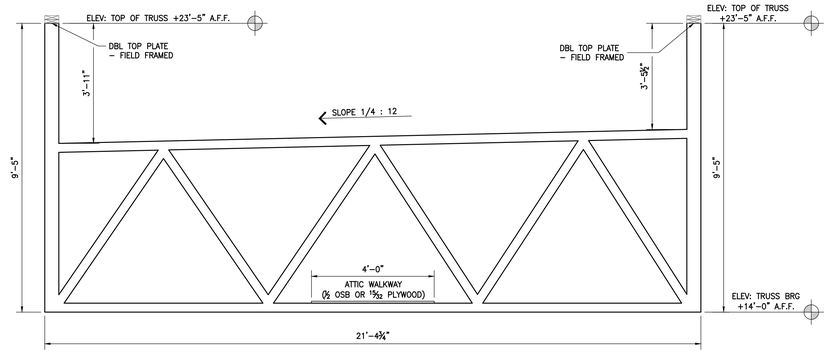

TRUSS TYPE A SCALE: 1/2" = 1'-0"

ROOF TRUSS DESIGN NOTE:

- TRUSS MANUFACTURER / DESIGN ENGINEER TO DETERMINE IF END PARAPET VERTICALS ARE SHOP OR FIELD ATTACHED. IF PARAPET VERTICALS ARE TO BE FIELD ATTACHED, DESIGN ENGINEER MUST PROVIDE A FASTENER PATTERN FOR THE ATTACHMENT OF THE 2X VERTICAL SCAB TO THE TRUSS – 2X VERTICAL SCAB SHALL BE FULL DEPTH OF TRUSS END. CONNECTION SHALL BE ADEQUATE TO TRANSFER ALL LATERAL LOADING FROM WIND / SEISMIC FORCES.

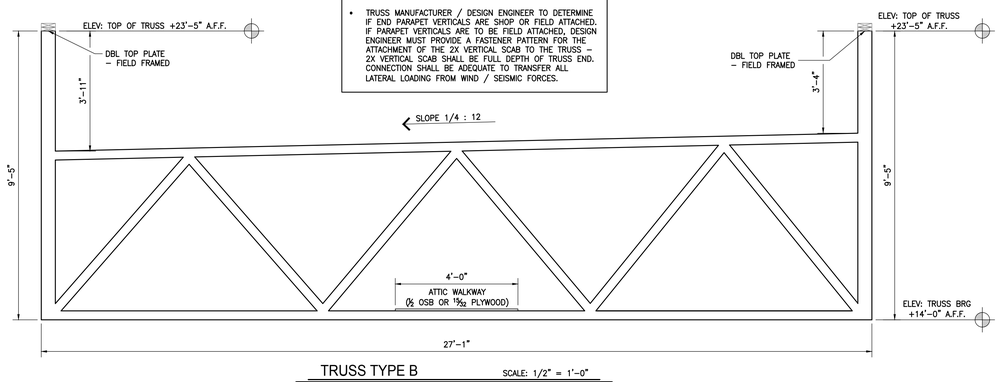

TRUSS TYPE B SCALE: 1/2" = 1'-0"

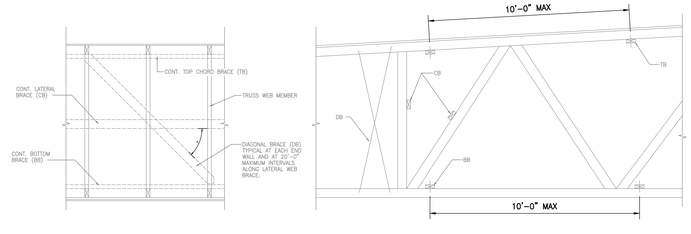

TYPICAL ROOF TRUSS BRACING DETAILS

BRACING NOTE:

1. WOOD TRUSS ERECTOR SHALL PROVIDE BRACING AS REQUIRED BY THE WOOD CONSTRUCTION INDUSTRY STANDARDS & BUILDING COMPONENT SAFETY INFORMATION BCSI. NOTE THAT THE COMBINED WIND AREA IS GREATER BEFORE THE ROOF SHEATHING IS APPLIED. BRACING SHALL BE INSTALLED AS THE TRUSSES ARE ERECTED. INADEQUATE BRACING IS THE MOST COMMON CAUSE OF ACCIDENT IN TRUSS CONSTRUCTION. FULL BUNDLES OF PLYWOOD SHALL NOT BE PLACED ON TRUSSES. NO EXCESS CONCENTRATION OF ANY CONSTRUCTION MATERIALS SHALL BE PLACED ON THE TRUSSES IN ANY ONE AREA AND SHOULD BE SPREAD OUT EVENLY OVER A LARGE AREA TO AVOID OVERLOADING ANY ONE TRUSS.
2. ALL BRACING (DB, TB, BB) SHALL BE IN ADDITION TO CONTINUOUS LATERAL BRACING SPECIFIED BY THE TRUSS MANUFACTURER. ALL LATERAL BRACING SPECIFIED BY TRUSS MANUFACTURER SHALL HAVE ADDITIONAL DIAGONAL BRACES AT 20'-0" O.C. MAXIMUM.
3. ALL BRACES SHALL BE ATTACHED WITH (2) 12d NAILS AT EACH TRUSS INTERSECTION.
4. MINIMUM BRACING SHALL BE CONTINUOUS AT TOP AND BOTTOM CHORDS 10'-0" O.C. MAXIMUM.

MINIMUM ATTACHMENT REQUIREMENTS FOR LUMBER RESTRAINT BRACING

Lumber Size	Minimum Nail Size	Minimum Number of Nails per Connection
2x4 stress-graded	10d (0.128x3") 12d (0.128x3.25") 16d (0.131x3.5")	2
2x6 stress-graded	10d (0.128x3") 12d (0.128x3.25") 16d (0.131x3.5")	3

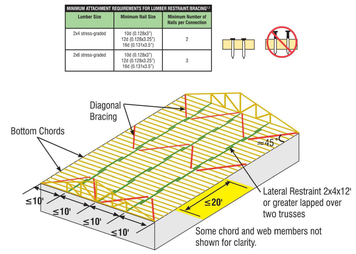

Lateral Restraint and Diagonal Bracing used to brace the Bottom Chord Plane.

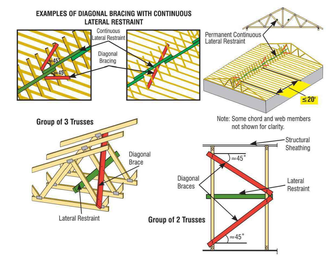

TYPICAL DETAILS (FROM BCSI B3)

BLUDOT ENGINEERING
P.O. Box 286
Benton, Louisiana 71006
Voice 318.402.4640
Fax 318.383.6657
www.bludotengineering.com

ASHE | BROUSSARD | WEINZETTLE ARCHITECTS

This drawing and design are the property of Ashe Broussard Weinzettle Architects. They are submitted on the condition that they are not to be used, reproduced, or copied, in whole or in part, or used for furnishing information to others, without the prior written consent of Ashe Broussard Weinzettle Architects. All common law rights of copyright and otherwise are hereby specifically reserved.

STATE OF LOUISIANA
JASON E. COTTOM
License. No. 39437
PROFESSIONAL ENGINEER
IN
Civil Engineering
04/28/2023

REVISIONS

revision	description	date
	-	-
	-	-

RED RIVER BANK
1918 Veterans Boulevard
Metairie, Louisiana 70005

sheet contents
ROOF FRAMING PLAN

project no. 2021.53
drawn J.E.C.
checked J.E.C.
project date April 2023
drawing no. **S3.0**

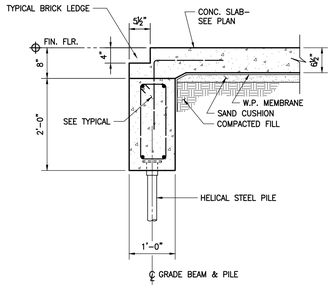

SECTION 1 / S4.0
SCALE: 3/4"=1'–0"

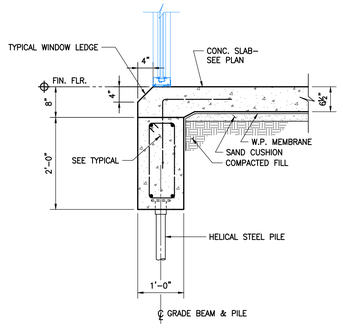

SECTION 2 / S4.0
SCALE: 3/4"=1'–0"

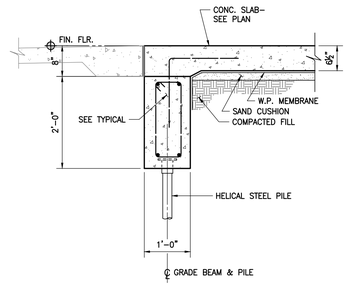

SECTION 3 / S4.0
SCALE: 3/4"=1'–0"

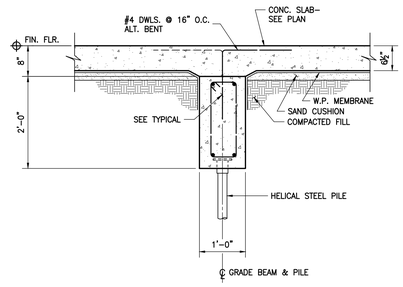

SECTION 4 / S4.0
SCALE: 3/4"=1'–0"

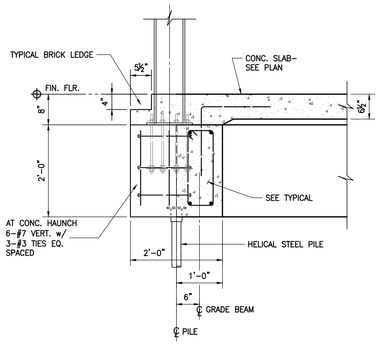

SECTION 5 / S4.0
SCALE: 3/4"=1'–0"

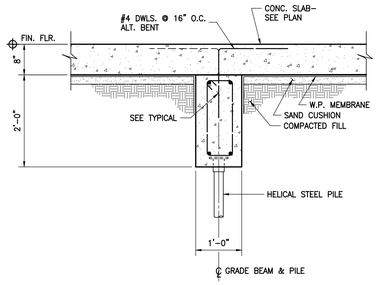

SECTION 6 / S4.0
SCALE: 3/4"=1'–0"

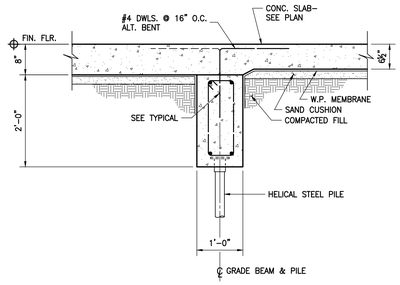

SECTION 7 / S4.0
SCALE: 3/4"=1'–0"

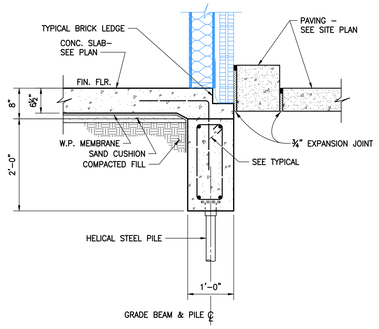

SECTION 8 / S4.0
SCALE: 3/4"=1'–0"

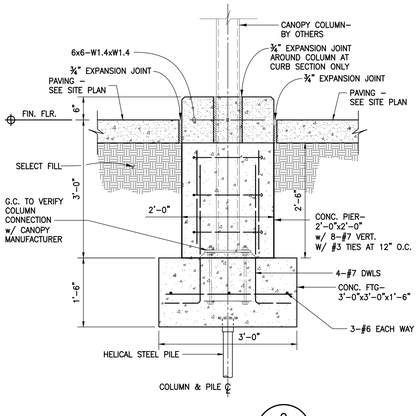

SECTION 9 / S4.0
SCALE: 3/4"=1'–0"

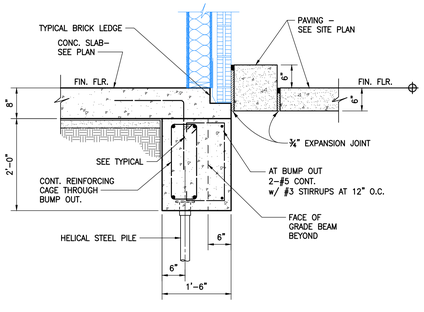

SECTION 10 / S4.0
SCALE: 3/4"=1'–0"

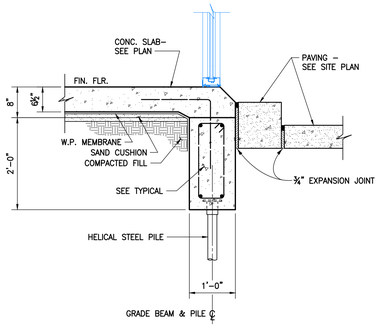

SECTION 11 / S4.0
SCALE: 3/4"=1'–0"

BLUDOT ENGINEERING
P.O. Box 286
Benton, Louisiana 71006
Voice 318.402.4640
Fax 318.383.6667
www.bludotengineering.com

ASHE | BROUSSARD | WEINZETTLE ARCHITECTS

This drawing and design are the property of Ashe Broussard Weinzettle Architects. They are submitted on the condition that they are not to be used, reproduced, or copied, in whole or in part, or used for furnishing information to others, without the prior written consent of Ashe Broussard Weinzettle Architects. All common law rights of copyright and otherwise are hereby specifically reserved.

STATE OF LOUISIANA
JASON E. COTTOM
License. No. 39437
PROFESSIONAL ENGINEER
IN
Civil Engineering
04/28/2023

REVISIONS

revision	description	date
	-	-
	-	-

RED RIVER BANK

1918 Veterans Boulevard
Metairie, Louisiana 70005

project no. 2021.53
drawn J.E.C.
checked J.E.C.
project date April 2023

sheet contents
FOUNDATION SECTIONS

drawing no. **S4.0**

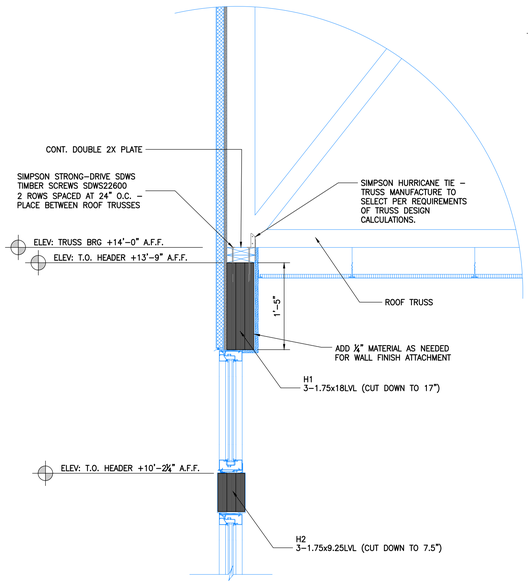

TYPICAL EXTERIOR WALL HEADER DETAIL

SCALE: 1" = 1'-0"

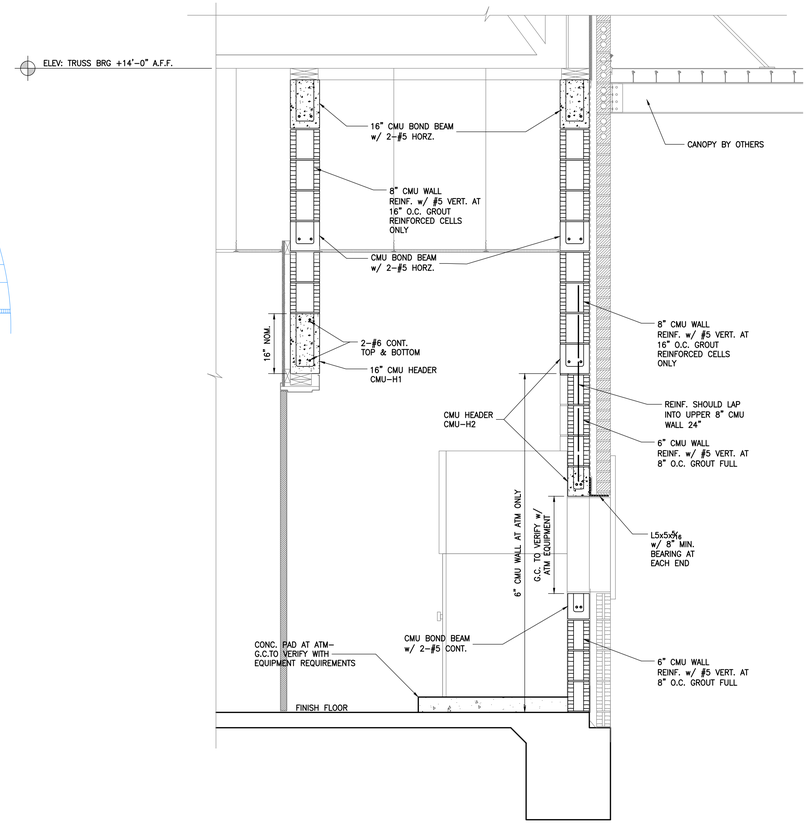

TYPICAL WALL SECTION AT ATM

SCALE: 3/4" = 1'-0"

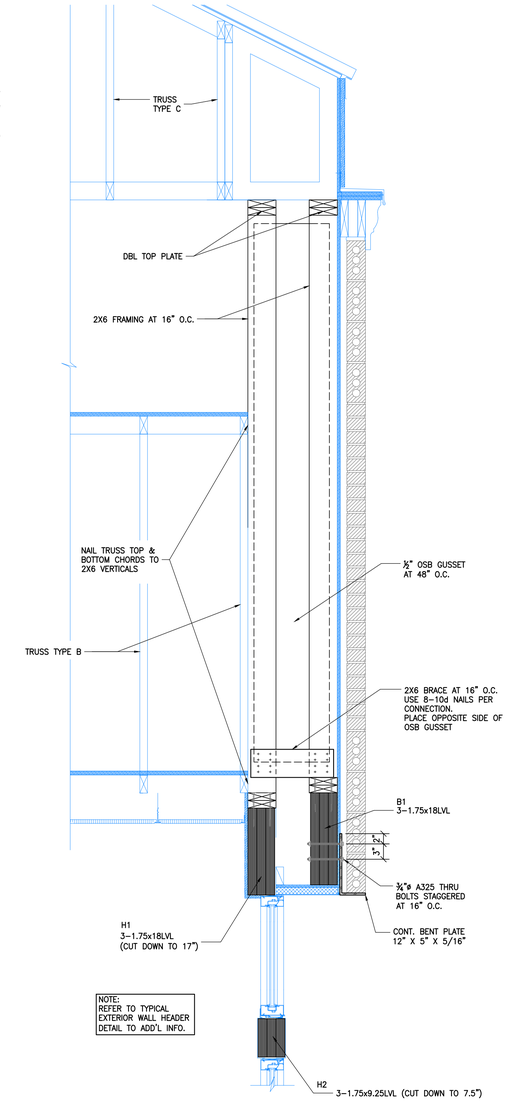

SECTION 1 / S5.0

SCALE: 1"=1'-0"

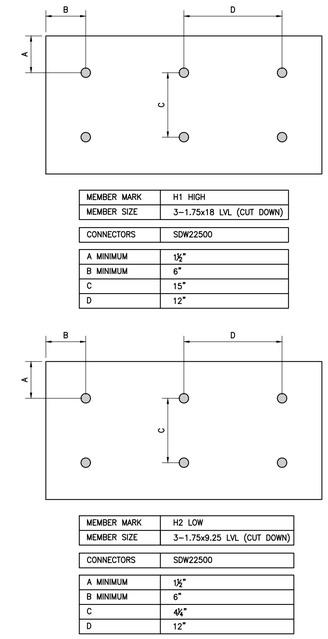

MEMBER MARK	H1 HIGH
MEMBER SIZE	3-1.75x18 LVL (CUT DOWN)
CONNECTORS	SDW22500
A MINIMUM	1½"
B MINIMUM	6"
C	15"
D	12"

MEMBER MARK	H2 LOW
MEMBER SIZE	3-1.75x9.25 LVL (CUT DOWN)
CONNECTORS	SDW22500
A MINIMUM	1½"
B MINIMUM	6"
C	4¾"
D	12"

LVL CONNECTION DETAILS

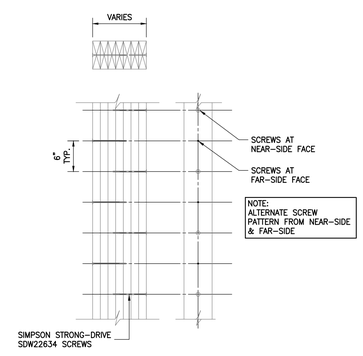

BUILT-UP STUD COLUMN CONNECTION DETAIL

SCALE: 1" = 1'-0"

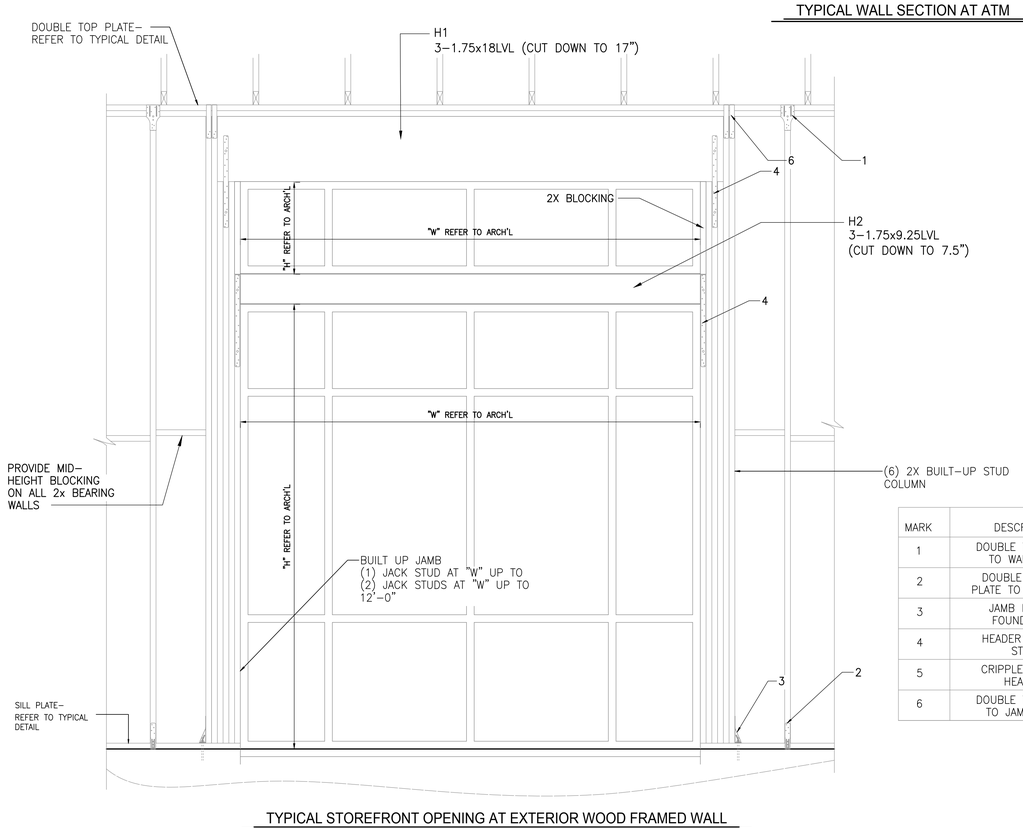

TYPICAL STOREFRONT OPENING AT EXTERIOR WOOD FRAMED WALL

MARK	DESCRIPTION	SIMPSON CONNECTOR	
1	DOUBLE TOP PLATE TO WALL STUD	SP2 TYPICAL AT EACH STUD	
2	DOUBLE BOTTOM PLATE TO WALL STUD	SSP TYPICAL AT EACH STUD	
3	JAMB PACK TO FOUNDATION	DTT2Z-SDS2.5 (UP TO 6'-0" MAX OPENING)	HDU4-SDS2.5 (UP TO 12'-0" MAX OPENING)
4	HEADER TO JACK STUD	MSTA24 EACH STUD (UP TO 6'-0" MAX OPENING)	(2) MSTA24 (UP TO 12'-0" MAX OPENING)
5	CRIPPLE STUD TO HEADER	SP2 TYPICAL AT EACH STUD	
6	DOUBLE TOP PLATE TO JAMB STUDS	SP4 TYPICAL AT EACH STUD	

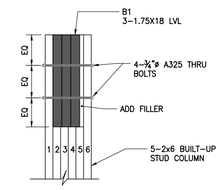

B1 SUPPORT COLUMN DETAIL

BLUDOT ENGINEERING
P.O. Box 286
Benton, Louisiana 71006
Voice 318.402.4640
Fax 318.383.6667
www.bludotengineering.com

ASHE | BROUSSARD | WEINZETTLE ARCHITECTS

This drawing and design are the property of Ashe Broussard Weinzettle Architects. They are submitted on the condition that they are not to be used, reproduced, or copied, in whole or in part, or used for furnishing information to others, without the prior written consent of Ashe Broussard Weinzettle Architects. All common law rights of copyright and otherwise are hereby specifically reserved.

STATE OF LOUISIANA
JASON E. COTTOM
License. No. 39437
PROFESSIONAL ENGINEER
IN
Civil Engineering
04/28/2023

REVISIONS

revision	description	date
	-	-
	-	-

RED RIVER BANK

1918 Veterans Boulevard
Metairie, Louisiana 70005

project no. 2021.53
drawn J.E.C.
checked J.E.C.
project date April 2023

sheet contents: FRAMING SECTIONS

drawing no. S5.0

GENERAL NOTES:

GENERAL:

1. THE CONTRACTOR SHALL VERIFY FIELD DIMENSIONS AND CONDITIONS BEFORE CONSTRUCTION AND NOTIFY THE ARCHITECT OF ANY DISCREPANCIES OR INCONSISTENCIES BEFORE PROCEEDING WITH THE WORK.
2. THE CONTRACTOR SHALL VERIFY LOCATIONS AND SIZES OF ALL OPENINGS IN FLOORS AND ROOFS AND ALL INSERTS AND EMBEDDED ITEMS WITH MECHANICAL, ELECTRICAL, AND ARCHITECTURAL DRAWINGS BEFORE PLACING CONCRETE, OR ERECTING ANY STRUCTURAL LOAD BEARING MATERIAL. THE GENERAL CONTRACTOR SHALL BE SOLELY RESPONSIBLE FOR ALL COORDINATION WITH SUB-CONTRACTORS.
3. ADEQUATE TEMPORARY BRACING WILL BE REQUIRED OF ALL STRUCTURAL PIECES OR WALLS AND ROOF DECKS ARE IN PLACE, AND ALL CONCRETE HAS BEEN PLACED AND GAINED ITS ULTIMATE STRENGTH.
4. IN CASE OF DISCREPANCIES IN DIMENSIONS AND ELEVATIONS BETWEEN STRUCTURAL AND ARCHITECTURAL DRAWINGS, CONTRACTOR SHALL VERIFY WITH ARCHITECT PRIOR TO FABRICATION AND CONSTRUCTION.
5. THE LATEST EDITION OF ACI, AISC, AITC AND CRSI SPECIFICATIONS SHALL GOVERN ALL PHASES OF FABRICATION AND CONSTRUCTION.
6. SITE LOCATION: LATITUDE 30.0016812 LONGITUDE -90.1448365
7. DESIGN CODES AND GENERAL CRITERIA:
   - A. 2021 INTERNATIONAL BUILDING CODE.
   - B. ACI 318-14 BUILDING CODE REQUIREMENTS FOR REINFORCED CONCRETE.
   - C. AISC SPECIFICATION FOR STRUCTURAL STEEL FOR BUILDINGS - ALLOWABLE STRESS DESIGN AND PLASTIC DESIGN, THIRTEENTH EDITION.
   - D. AISC CODE OF STANDARD PRACTICE FOR STEEL BUILDINGS AND BRIDGES.
   - E. ASCE 7-16 MINIMUM DESIGN LOADS FOR BUILDINGS AND OTHER STRUCTURES.
8. DESIGN LOADS:
   - A. ROOF DEAD LOAD - 20 PSF
   - B. ROOF LIVE LOAD - 20 PSF
   - C. ATTIC LIVE LOAD - 5 PSF
   - D. FLOOR LIVE LOAD - 50 PSF
   - E. SNOW DESIGN DATA
     - GROUND SNOW LOAD - 0 PSF
   - F. WIND DESIGN DATA
     - WIND LOAD (Vult) - 141 MPH PER ASCE 7-16
     - WIND LOAD (Vasd) - 109 MPH PER ASCE 7-16
     - RISK CATEGORY - 2
     - WIND EXPOSURE CATEGORY - C
     - INTERNAL PRESSURE COEFFICIENT - 0.18
   - G. SEISMIC DESIGN DATA
     - SITE CLASS - E - SOFT CLAY SOIL
     - RISK CATEGORY - 2
     - DESIGN CATEGORY - D
     - BASIC SEISMIC-FORCE RESISTING SYSTEM: LIGHT-FRAMED WALLS SHEATHED WITH WOOD STRUCTURAL PANELS RATED FOR SHEAR RESISTANCE
     - MAPPED MAXIMUM CONSIDERED EARTHQUAKE SPECTRAL RESPONSE ACCELERATION - Ss = 9.7%, S1 = 5.2%
     - MAXIMUM CONSIDERED EARTHQUAKE SPECTRAL RESPONSE ACCELERATION - Sms = 20.7%, Sm1 = 22.5%
     - DESIGN S.R.A. PARAMETERS - Sds = 16.1%, Sd1 = 12.1%

FOUNDATION:

0. THE GEOTECHNICAL INVESTIGATION FOR THIS PROJECT WAS CONDUCTED BY GEOTECHNICAL TESTING LABORATORY, INC, REPORT NUMBER 10-22-168. CONTRACTOR SHALL REVIEW THE REPORT AND ALSO BE FAMILIAR WITH THE EXISTING SOIL CONDITIONS AS REPRESENTED BY THE SUBSURFACE EXPLORATION LOGS.
1. FOUNDATION DESIGN SHALL USE HELICAL PILES. HELICAL PILES SHOULD BE DESIGNED TO RESIST THE LOADING NOTED ON S1.0.
2. SLAB & GRADE BEAMS ARE DESIGNED TO FUNCTION AS A STRUCTURALLY SUSPENDED SLAB. DUE TO THE SOIL CHARACTERISTICS, VOID BOXES ARE NOT REQUIRED.
3. EARTHWORK: ALL EXISTING PAVEMENTS, FOUNDATIONS, UTILITIES, VEGETATION, TOPSOIL CONTAINING ORGANIC MATERIALS AND ANY SOFT SOILS SHALL BE CLEARED AND GRUBBED FROM THE BUILDING SITE. EXCAVATE FROM EXISTING GRADE AS REQUIRED. SLOPE FINAL CUT OF EXCAVATED SURFACE ON ONE PERCENT (1%) TO ALLOW DRAINAGE OF ANY WATER UNDER FOUNDATION. AFTER REMOVAL OF VEGETATION AND EXCAVATION, THE EXPOSED SURFACE SHALL BE PROOF ROLLED AND ANY SORT OF COMPRESSIBLE MATERIAL SHALL BE REMOVED OR IMPROVED BY DENSIFICATION AS RECOMMENDED FOR COMPACTED FILL BELOW FOUNDATIONS.
4. EXPOSED SURFACE COMPACTION: EXPOSED SURFACE SOIL TO RECEIVE SELECT FILL SHOULD BE SCARIFIED TO A MINIMUM OF EIGHT (8) INCHES AND MOISTURE CONDITIONED TO A MINIMUM OF NINETY-FIVE PERCENT (95%) OF MAXIMUM DRY DENSITY AT MINUS ONE (-1%) PERCENTAGE POINTS BELOW TO PLUS THREE (+3%) PERCENTAGE POINTS ABOVE ITS OPTIMUM MOISTURE CONTENT AS DETERMINED BY THE STANDARD PROCTOR METHOD, ASTM SPECIFICATION D698.

   IF INSTABILITY PERSISTS WITHIN THE EXPOSED SUBGRADE AT THE BOTTOM OF THE BUILDING PAD EXCAVATION, THE AREA MAY REQUIRE OVER-EXCAVATION OF THE WET MATERIAL TO PROVIDE A SINGLE OVER-SIZED BRIDGE LIFT OF DRIER MATERIAL. OVER-EXCAVATION FOR A BRIDGE LIFT COULD EXTEND TO DEPTHS RANGING FROM 1.5 TO 2 FEET. THE FILL FOR THIS LAYER SHOULD CONSIST OF SILTY OR SANDY CLAY WITH A PLASTICITY INDEX BETWEEN 25 AND 35 AND A MOISTURE CONTENT NOR MORE THAN FOUR (4) PERCENT BELOW OPTIMUM MOISTURE CONTENT. TO PREVENT MOISTURE FROM MIGRATING INTO BRIDGE LIFT FROM BELOW, COMPACTION LEVEL FOR THE BRIDGE LIFT SHOULD BE BETWEEN 90 AND 95 PERCENT OF STANDARD PROCTOR DENSITY. ONCE THE BRIDGE LIFT IS ESTABLISHED, THE SELECT FILL MY BE PLACE AND COMPACTED AS NOTED IN GENERAL NOTES-FOUNDATION.
5. ALL SOIL USED AS FILL SHALL BE A NON-EXPANSIVE SANDY CLAY OR CLAYEY SAND WITH A MAXIMUM LIQUID LIMIT OF 40, PLASTICITY INDEX RANGING BETWEEN 8 AND 20 AND HAVE A MINIMUM OF 30% RETAINED ON THE #200 SIEVE. SLABS-ON-GRADE LEVELING BED SHALL BE EITHER WELL-GRADED WASHED CONCRETE SAND OR AASHTO #57 LIMESTONE.
6. SELECT FILL COMPACTION: SELECT FILL REQUIRED BENEATH THE FLOOR SLAB SHOULD EXTEND AT LEAST FIVE (5) FEET BEYOND THE EDGE OF BUILDING. SELECT FILL SLAB SHALL BE PLACED IN EIGHT (8) INCH THICK LOOSE LIFTS AND COMPACTED WITHIN THE RANGE OF MINUS ONE (-1%) PERCENTAGE POINTS BELOW TO PLUS THREE (+3%) PERCENTAGE POINTS ABOVE THE OPTIMUM CONTENT VALUE AND A MINIMUM OF NINETY-FIVE PERCENT (95%) OF MAXIMUM DRY DENSITY AS DETERMINED BY THE STANDARD PROCTOR METHOD, ASTM SPECIFICATION D698.
7. POSITIVE SURFACE DRAINAGE AWAY FROM THE STRUCTURES SHALL BE ESTABLISHED AND MAINTAINED AT ALL TIMES BOTH DURING AND AFTER CONSTRUCTION. WATER SHALL NOT BE ALLOWED TO COLLECT NEAR THE BUILDING SITE AT ANY TIME.
8. FINISH GRADES OF FILL: THE FINISH GRADES OF FILL AGAINST GRADE BEAMS SHALL SLOPE AWAY FROM THE BUILDING AND CARE SHALL BE TAKEN THAT NO LOW SPOTS EXIST IN FILL THAT ALLOWS WATER TO COLLECT.
9. CONTRACTOR SHALL PROVIDE ADEQUATE EXCAVATION SHORING TO PREVENT CAVE-INS.
10. ALL FOUNDATION EXCAVATIONS SHALL BE INSPECTED BY THE ARCHITECT PRIOR TO PLACEMENT OF REINFORCING STEEL OR CONCRETE.
11. EACH LIFT OF COMPACTED SOIL SHOULD BE TESTED AND INSPECTED BY THE SOILS ENGINEER OR HIS REPRESENTATIVE PRIOR TO PLACEMENT OF SUBSEQUENT LIFTS.
12. CONDUCT IN-PLACE DENSITY TESTS AT THE RATE OF NOT LESS THAN ONE (1) TEST PER 2500 SQUARE FEET OF SURFACE AREA OR MINIMUM OF FOUR (4) TESTS PER LIFT FOR EACH TESTED AREA.
13. CONFIRM SUITABILITY BY ATTERBERG LIMIT TESTS AT THE RATE OF AT LEAST ONE TEST PER 250 CUBIC YARDS.
14. CONTRACTOR SHALL PROVIDE FOR DEWATERING AT EXCAVATIONS FROM EITHER SURFACE WATER OR SEEPAGE.
15. PERCHED WATER MAY BE BRIEFLY ENCOUNTERED IN LOW QUANTITIES DURING EARTHWORK AND IS TYPICALLY DUE TO STORAGE OF RECENT RAINFALL OR BY A BARRIER TO CAPILLARY EVAPORATION. WHERE PERCHED WATER IS ENCOUNTERED, THE CONTRACTOR SHOULD EXPECT TO EXCAVATE GRAVITY DRAINAGE DITCHES TO DIVERT IT AWAY FROM THE CONSTRUCTION AREA. THE DEPTH OF THE DITCHES SHOULD BE AT LEAST TWO (2) TO THREE (3) FEET DEEPER THAN THE LOWEST EXTERIOR FOOTING ELEVATIONS. ADDITIONALLY, SOFT, WET AND PUMPABLE SOILS CAN BE EXPECTED BELOW PERCHED WATER TABLES. IN STRUCTURAL AREAS, THESE SHOULD BE REMOVED TO FIRM GROUND AND REPLACED WITH SELECT FILL SOILS COMPACTED TO PROJECT SPECIFICATIONS.

SPECIAL INSPECTION NOTES:

1. SPECIAL INSPECTIONS ARE REQUIRED FOR CONCRETE CONSTRUCTION AS REQUIRED IN CHAPTER 17 OF THE IBC 2021. ALL EFFECTIVE ADDENDUMS AND/OR REVISIONS TO THIS CHAPTER SHALL BE CONSIDERED.
2. AN AGENCY QUALIFIED IN SPECIAL INSPECTIONS AND ACCEPTABLE TO THE BUILDING CODE OFFICIAL SHALL BE ENGAGED TO DO THE SPECIAL INSPECTION WORK.
3. THE CONTRACTOR SHALL COORDINATE AND SCHEDULE THE WORK TO ALLOW REQUIRED SPECIAL INSPECTIONS WITHOUT DELAYING THE PERFORMANCE OF THE WORK. THE CONTRACTOR SHALL PROVIDE A MINIMUM OF 48 HOURS ADVANCE NOTICE TO SPECIAL INSPECTORS.
4. SPECIAL INSPECTION OF ALL CONCRETE CONSTRUCTION SHALL MEET THE VERIFICATION AND INSPECTION REQUIREMENTS OF IBC 2021 TABLE 1705.3.

CONCRETE:

1. ALL STRUCTURAL CONCRETE SHALL BE CLASSIFIED AS NORMAL WEIGHT CONCRETE WITH A UNIT WEIGHT OF 145 LBS/CU. FT. CONCRETE MEMBERS SHALL NOT BE LOADED UNTIL THE SPECIFIED CONCRETE STRENGTH HAS BEEN ACHIEVED. AT THE CONTRACTOR'S OPTION, HIGHER STRENGTH CONCRETE MAY BE SUPPLIED TO ACCELERATE SCHEDULE.
2. MINIMUM CONCRETE 28 DAY COMPRESSIVE STRENGTH AND SLUMP:

	STRENGTH:	SLUMP: MIN./MAX.
GRADE BEAMS	3000 psi	3IN./5IN.
SLABS ON GRADE	3000 psi	2IN./4IN.
ALL OTHER CONCRETE	3000 psi	3IN./5IN.

   CONCRETE MIX DESIGNS FROM THE CONCRETE SUPPLIER AND TEST RESULTS FROM THE TESTING LAB SHALL BE SUBMITTED TO THE ARCHITECT/ENGINEER FOR EVALUATION AND APPROVAL.
3. ALL CAST-IN-PLACE CONCRETE WORK SHALL BE IN ACCORDANCE WITH ACI 301, LATEST EDITION.
4. ALL DETAILING, FABRICATION AND INSTALLATION OF STEEL REINFORCEMENT SHALL BE IN ACCORDANCE WITH ACI 315 AND ACI 318 (LATEST EDITIONS).
5. CONCRETE REINFORCING: REINFORCING STEEL SHALL BE DEFORMED BARS CONFORMING TO ASTM A615, GRADE 60 BARS.
6. MINIMUM COVERAGE ON REINFORCING STEEL:
   - CONCRETE CAST AGAINST EARTH - 3" CLEAR TO STIRRUP
   - CONCRETE CAST AGAINST FORMS - 2" CLEAR TO STIRRUP
   - GRADE BEAMS - 3/4" TOP, 3" BOTTOM, 1-1/2" ON FORMED SIDES
   - TOP OF SUSPENDED SLABS - 3/4"
   - BOTTOM OF SUSPENDED SLABS - 1-1/2"
7. GRADE BEAMS SHALL BE ON SIZE AND WITH REINFORCEMENT AS INDICATED ON PLANS. DETAIL REINFORCING AND PROVIDE CORNER BARS AT GRADE BEAM INTERSECTIONS TO MATCH HORIZONTAL REINFORCING. SPLICE BOTTOM REINFORCING WHEN NECESSARY OVER SUPPORTS. SPLICE TOP REINFORCING WHEN NECESSARY AT MID-SPAN. ALL SPLICES SHALL BE ACCORDANCE WITH THE ACI 318 AND THE TYPICAL DETAILS CONTAINED ON THE DRAWINGS.
8. EARTH FORMED GRADE BEAMS ARE NOT ALLOWED.
9. SLABS ON GRADE: SLABS ON GRADE SHALL BE OF THE THICKNESS AND WITH REINFORCEMENT AS SHOWN ON DRAWINGS. APPLY CURING COMPOUND IN ACCORDANCE WITH THE SPECIFICATIONS AND MANUFACTURER'S RECOMMENDATIONS. SLAB REINFORCING SHALL BE CENTERED IN SLAB. CARE SHALL BE TAKEN TO MAINTAIN SLAB REINFORCEMENT POSITION DURING PLACING OPERATION.
10. UNLESS NOTED OTHERWISE, PROVIDE 90 DEGREE CORNERS AT ALL EXPOSED EDGES AND CORNERS.

REINFORCING STEEL:

1. ALL REINFORCING STEEL SHALL BE NEW BILLET, ASTM A615 GRADE 60 DEFORMED DOMESTIC BARS. ALL DETAILING, FABRICATION, PLACING AND SUPPORTING SHALL BE IN ACCORDANCE WITH ACI 318 AND CRSI.
2. ALL DOWELS SHALL BE THE SAME SIZE AND SPACING AS ADJOINING MAIN BARS (MIN. LAP 30 BAR DIA.), UNLESS NOTED OR DETAILED OTHERWISE. THE MINIMUM SPLICE OF ALL CONTINUOUS BARS SHALL BE 40 BAR DIA. (2'-0" MIN.). PROVIDE OUTSIDE CORNER BARS IN ALL BEAMS, BARS SHALL BE SAME SIZE AS MAIN BEAM STEEL; LAP 30 BAR DIA.
3. CLEAR MINIMUM COVERAGE OF CONCRETE OVER REINFORCING BARS SHALL BE AS FOLLOWS:
   - CONCRETE PLACED AGAINST EARTH - 3"
   - FORMED CONCRETE AGAINST EARTH - 1-1/2"
   - BEAMS TO TIES/STIRRUPS - 1-1/2"
4. ALL REINFORCING BARS, BOLTS, DOWELS, INSERTS, ETC., SHALL BE RIGIDLY SECURED IN POSITION PRIOR TO PLACING CONCRETE.
5. CONTRACTOR SHALL SUBMIT COMPLETE SHOP AND PLACING DRAWINGS AND OBTAIN APPROVAL PRIOR TO FABRICATION.

TIMBER FRAMING:

1. SAWN TIMBER MEMBERS SHALL CONFORM TO THE REQUIREMENTS OF THE AMERICAN INSTITUTE OF TIMBER CONSTRUCTION STANDARDS, A.I.T.C. LATEST EDITION.
2. SAWN LUMBER SHALL BE #2 K.D. SOUTHERN YELLOW PINE, MOISTURE CONTENT 15%.
3. ALL TIMBER MEMBERS IN CONTACT WITH CONCRETE OR MASONRY SHALL BE PRESSURE TREATED WITH A WATER BORNE TREATMENT TO A NET RETENTION OF 0.3 POUNDS PER CUBIC FOOT.
4. ROOF SHEATHING SHALL BE 3/4" ORIENTED STRAND BOARD (OSB) OR 22/32" PLYWOOD. REFER TO TYPICAL DETAIL FOR NAILING PATTERN. BLOCK ALL PANEL EDGES AS REQUIRED.
5. WALL SHEATHING SHALL BE 1/2" ORIENTED STRAND BOARD (OSB) OR 15/32" PLYWOOD. SEE TYPICAL DETAIL FOR NAILING PATTERN. BLOCK ALL PANEL EDGES AS REQUIRED.
6. ALL ROOF TRUSSES SHALL BE DESIGNED BY THE FABRICATOR TO SUPPORT 10 PSF DEAD LOAD ON THE TOP CHORD AND 10 PSF DEAD LOAD ON THE BOTTOM CHORD PLUS 20 PSF LIVE LOAD ON THE TOP CHORD PLUS 5 PSF LIVE LOAD ON THE BOTTOM CHORD, PLUS CODE WIND LOAD.
7. FABRICATOR SHALL SUBMIT CALCULATIONS WITH SHOP DRAWINGS SEALED BY A PROFESSIONAL ENGINEER REGISTERED IN THE STATE OF LOUISIANA TO THE ARCHITECT FOR REVIEW PRIOR TO FABRICATION OF TRUSSES.
8. TRUSS DIMENSIONS SHOWN ARE FOR ESTIMATING PURPOSES ONLY AND ARE NOT TO BE USED FOR FABRICATION. FABRICATOR SHALL BE RESPONSIBLE FOR ACTUAL DIMENSIONS OF TRUSSES.
9. TRUSS CONNECTIONS TO LOAD BEARING WALLS SHALL BE DESIGNED BY TRUSS MANUFACTURER.
10. BUILT-UP STUD COLUMNS AT EDGES OF ALL OPENINGS 3 MIN - UNLESS NOTED OTHERWISE.

STRUCTURAL STEEL:

1. ALL WIDE FLANGE SECTIONS SHALL BE ASTM A992. ALL ANGLES, AND PLATES SHALL BE ASTM A36. ALL STRUCTURAL STEEL PIPE SHALL BE ASTM A53 GRADE B. ALL HOLLOW STRUCTURAL STEEL TUBE SECTIONS SHALL BE ASTM A500 GRADE B.
2. STRUCTURAL STEEL SECTIONS SHALL BE DESIGNED, DETAILED FABRICATED AND ERECTED IN ACCORDANCE WITH THE AISC "MANUAL OF STEEL CONSTRUCTION", ALLOWABLE STRESS DESIGN, LATEST EDITION. ALL LOADS SPECIFIED ON THE DRAWINGS ARE SERVICE LOADS.
3. ALL BOLTED CONNECTIONS FOR STRUCTURAL STEEL SHALL USE MIN. ¾" DIAMETER ASTM A325 HIGH STRENGTH BOLTS. CONNECTIONS SHALL BE BEARING TYPE WITH THREADS ALLOWED IN THE SHEAR PLANE.
4. ALL STRUCTURAL STEEL BOLTED CONNECTIONS WITH ASTM-A325 ¾" DIAMETER BOLTS SHALL BE TIGHTENED TO ACHIEVE A MINIMUM BOLT TENSION FOR CALIBRATED WRENCHES OF 30,000LBS. THE CONTRACTOR SHALL HAVE A QUALIFIED TESTING AGENCY CHECK ALL CONNECTIONS.
5. ALL WELDS SHALL BE MADE USING E70XX LOW HYDROGEN ELECTRODES AND SHALL BE MADE IN ACCORDANCE WITH AISC AND AWS.
6. ALL STRUCTURAL STEEL SHALL BE PAINTED WITH A SHOP PRIME COAT AND FIELD RETOUCHED WHERE THE SHOP COAT HAS BEEN DAMAGED DUE TO PLACING, HANDLING AND WELDING. ALL STEEL BEAMS SHALL BE FABRICATED WITH NATURAL CAMBER UP.
7. CONTRACTOR SHALL SUBMIT COMPLETE SHOP DRAWINGS AND OBTAIN APPROVAL PRIOR TO FABRICATION.

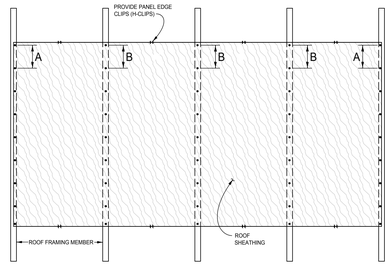

NAILING PATTERN SCHEDULE		
MARK	SPACING	NAIL TYPE
A	4 INCHES	8d RING-SHANK
B	4 INCHES	

RING-SHANK MINIMUM DIMENSIONS
- 0.113 INCH NOMINAL SHANK DIAMETER
- RING DIAMETER OF 0.012 OVER SHANK DIAMETER
- 16 TO 20 RINGS PER INCH
- 0.28 INCH FULL HEAD DIAMETER
- 2 INCH NAIL LENGTH

TYPICAL ROOF SHEATHING NAILING PATTERN

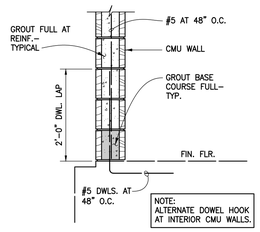

TYPICAL CMU DETAIL

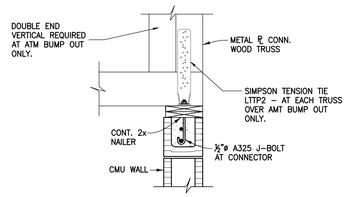

TYPICAL TRUSS TO CMU CONNECTION

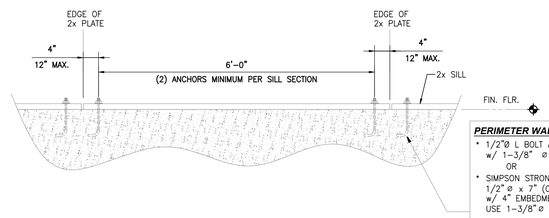

TYPICAL SILL ANCHOR DETAIL

PERIMETER WALLS:
- 1/2"Ø L BOLT ASTM A307 GRADE A (SIMPSON L BOLT 50100) w/ 1-3/8" Ø WASHER
  OR
- SIMPSON STRONG-TIE, WEDGE-ALL WEDGE ANCHOR 1/2" Ø x 7" (CARBON STEEL - ZINC PLATED) w/ 4" EMBEDMENT INTO CONCRETE. USE 1-3/8" Ø WASHER

INTERIOR SHEAR WALLS:
- SIMPSON STRONG-TIE, WEDGE-ALL WEDGE ANCHOR 1/2" Ø x 7" (CARBON STEEL - ZINC PLATED) w/ 4" EMBEDMENT INTO CONCRETE. USE 1-3/8" Ø WASHER

INTERIOR NON-SHEAR WALLS:
- POWDER ACTUATED FASTENERS.

ABBREVIATION LEGEND:

&	AND	CONN.	CONNECTION	MID.	MIDDLE
℄	BUILDING LINE	CONT.	CONTINUOUS	MIN.	MINIMUM
℄	CENTER LINE	DIA. / ø	DIAMETER	NOM.	NOMINAL
⅃⅃	DOUBLE ANGLE	DIR.	DIRECTION	N.S.	NEAR SIDE
#	NUMBER	DN	DOWN	O.C.	ON CENTER
%	PERCENT	DWLS.	DOWELS	PSF	POUNDS PER SQUARE FOOT
⅊	PLATE	EA.	EACH	PSI	POUNDS PER SQUARE INCH
w/	WITH	EL.	ELEVATION	P.T.	POST TENSION
A.F.F.	ABOVE FINISH FLOOR	ELEV.	ELEVATION	REINF.	REINFORCING
ALT.	ALTERNATE	EQ.	EQUAL	REQ'D	REQUIRED
ANCH.	ANCHOR	FIN. FLR.	FINISH FLOOR	R.T.U.	ROOF TOP UNIT
ARCH'L	ARCHITECTURAL	F.L.	FLOW LINE	SQ. FT.	SQUARE FOOT
BOT.	BOTTOM	FTG.	FOOTING	TEMP.	TEMPERATURE
B.O.D.	BOTTOM OF DECK	F.S.	FAR SIDE	T.O.	TOP OF
B.O.S.	BOTTOM OF STEEL	GALV.	GALVANIZED	T.O.S.	TOP OF STEEL
B.S.	BRICK SHELF	HK.	HOOK	TYP.	TYPICAL
B.F.F.	BELOW FINISH FLOOR	H.T.	HURRICANE TIE	U.N.O.	UNLESS NOTED OTHERWISE
CMU	CONCRETE MASONRY UNIT	L.L.H.	LONG LEG HORIZONTAL	VERT.	VERTICAL
COL.	COLUMN	L.L.V.	LONG LEG VERTICAL	W.P.	WATER PROOFING
CONC.	CONCRETE	MAX.	MAXIMUM		

BLUDOT ENGINEERING
P.O. Box 286
Benton, Louisiana 71006
Voice 318.402.4640
Fax 318.383.6667
www.bludotengineering.com

ASHE | BROUSSARD | WEINZETTLE ARCHITECTS

This drawing and design are the property of Ashe Broussard Weinzettle Architects. They are submitted on the condition that they are not to be used, reproduced, or copied, in whole or in part, or used for furnishing information to others, without the prior written consent of Ashe Broussard Weinzettle Architects. All common law rights of copyright and otherwise are hereby specifically reserved.

STATE OF LOUISIANA
JASON E. COTTOM
License. No. 39437
PROFESSIONAL ENGINEER IN
Civil Engineering
4/28/2023

REVISIONS

revision	description	date
	-	-
	-	-

RED RIVER BANK

1918 Veterans Boulevard
Metairie, Louisiana 70005

project no.	2021.53
drawn	J.E.C.
checked	J.E.C.
project date	April 2023
drawing no.	S6.0

sheet contents: **GENERAL NOTES & TYPICAL DETAILS**

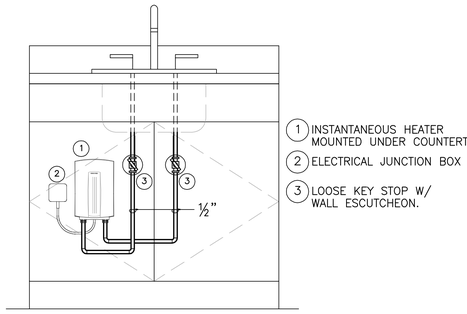

1 INSTANTANEOUS HEATER MOUNTED UNDER COUNTERTOP.
2 ELECTRICAL JUNCTION BOX
3 LOOSE KEY STOP W/ WALL ESCUTCHEON.

A PIPING DIAGRAM–UNDER COUNTER INSTANTANEOUS WATER HEATER

NO SCALE

NOTES:

1. PROVIDE 3.0 KW @ 208V–1PH INSTANTANEOUS HEATER WITH 0.5 GPM FLOW RESTRICTION. STIEBEL ELTRON DHC 4–2 OR APPROVED EQUAL.

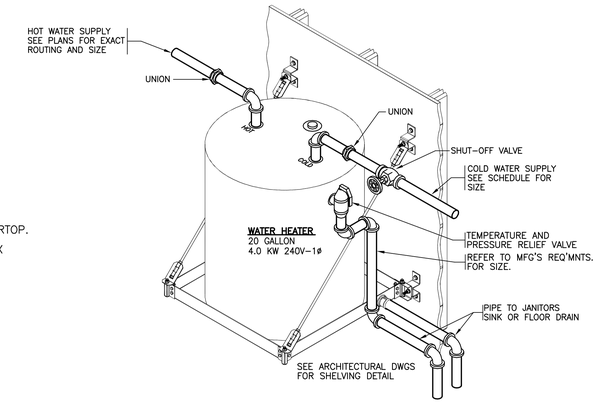

B DETAIL–ELECTRIC WATER HEATER

NO SCALE

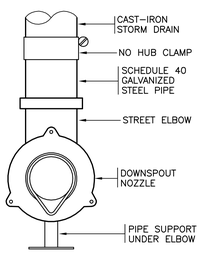

C DETAIL–DOWNSPOUT NOZZLE

NO SCALE

CAST BRONZE WITH THREADED OUTLET, FLANGED TO SECURE NOZZLE TO WALL. WADE MODEL 3940 SERIES, JOSAM 25010 SERIES, ZURN Z–199

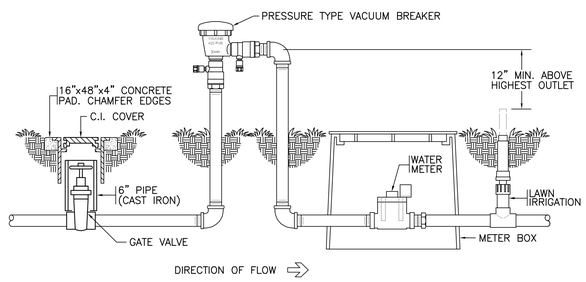

D DETAIL – VACUUM BREAKER, SHUT–OFF VALVE AND METER FOR LAWN IRRIGATION SYSTEM

NO SCALE

PLUMBING FIXTURE SCHEDULE

(D)=DELTA
(SY)=SYMMONS
(M)=McGUIRE MFG.CO.
(C)=CHICAGO FAUCET CO.

* CERTIFIED COMPLIANCE WITH ADA GUIDLINES AND ANSI A117.1 REQUIREMENTS FOR PEOPLE WITH DISABILITIES.
(1) ALL FIXTURES SHALL COMPLY WITH THE LOUISIANA STATE LEAD LEGISLATION (HB.471)
(2) PROVIDE ASSE 1070 CERTIFIED POINT OF USE ANTI–SCALD MIXING VALVE AT ALL LAVATORIES AND SINKS.

FIXTURE DESIG.	MFR.	FIXTURE	FITTING OR VALVE	STRAINER	TRAP	SUPPLY PIPES	REMARKS
SKA COUNTERTOP SINK	ELKAY JUST	DLR–2219 SLX–1921	---- ---- ---- Z831C4–XL 786–GN8AE29–ABCP BLADE HANDLES	LK–35 JV–35T	8912(M) ELJER 804–1190 KOHLER K–9000	2165 LK(M) ELJER 802–0325 KOHLER K–7607 **AMSTAN** 605XTMV–1070.007	22"x19"x7"SINGLE COMPARTMENT 18 GAUGE 302 STAINLESS STEEL,SELF–RIMMING GOOSENECK SPOUT,AERATOR, SOUND DEADENING UNDERCOAT PROVIDE ASSE 1070 CERTIFIED POINT OF USE ANTI–SCALD MIXING VALVE.
SKC UNDER COUNTER SINK	ELKAY JUST	ELU–2115 US–1824–A	LKAV3021(LS) ---- KOHLER K–22975(VS) DELTA 1930–AR–DST	LK–35 JV–35T	8912(M) ELJER 804–1190 KOHLER K–9000	2165 LK(M) ELJER 802–0325 KOHLER K–7607	16"x21"x7"SINGLE COMPARTMENT,18 GAUGE 302 STAINLESS STEEL,UNDERMOUNT SINK, VIBRANT STAINLESS GOOSENECK SPOUT,AERATOR,SOUND DEADENING UNDERCOAT
SSC FLOOR MTD. SERVICE SINK WITH WALL GUARD	FIAT ZURN	MSB 2424 Z1996–24	ZURN Z841M1 KOHLER K8908			LEONARD 170–LF LAWLER 570	24"x24" MOLDED SERVICE SINK WITH STRAINER, STOPPER, PAIL HOOK, WALL BRACKET AND WALL GUARD. ZURN JP1996–WG24 PROVIDE ASSE 1070 CERTIFIED POINT OF USE ANTI–SCALD MIXING VALVE.
EWBF* BI–LEVEL ADA WALL MTD. ELEC. WATER COOLER AND BOTTLE FILLER	HAL TAYLOR ELKAY	HTHB–HAC8BLPV –NF EMABFTLB8SLK	PUSH CONTROL	GRID	8872 (M) ELJER 804–1180 KOHLER K–9000	STOP IN CABINET	BARRIER FREE, PLATINUM VINYL CABINET,MOUNTING BRACKET, ADA COMPLIANT BI–LEVEL COOLER, AND BOTTLE FILLING STATION, LEAD FREE. MOUNT PER ANSI STANDARD A117.1
LB* WALL MTD. LAVATORY ADA COMPLIANT	AMSTAN CRANE KOHLER ZURN GERBER TOTO MANSFIELD DELTA CHICAGO SLOAN SPEAKMAN	0355.012 1412 K–2032 Z–5344 12–654 LT307.4 2018HBNS ---- ---- ---- SS–3003 ----	5500.170 ---- K–7404–K Z–81104 21C142 802A317 SL–0890 SC–3074	7723.018 LKAD174 K–7131 WATTS 628	8872C(M) 804–1180 K–8998 WATTS 519	2165 LK(M) 802–0325 K–7607 **AMSTAN** 605XTMV–1070.007 **LEONARD** 170–LF **LAWLER** 570	20"x18"VITREOUS CHINA, CENTERSET FAUCET, 4"BLADE HANDLES,AERATOR,2.5GPM FLOW RESTRICTOR CONCEALED ARM CHAIR CARRIER. MOUNT 34"AFF TO RIM OR AS INDICATED ON ARCH. DWGS. PROVIDE ASSE 1070 CERTIFIED POINT OF USE ANTI–SCALD MIXING VALVE.
WCO* FLOOR MTD. WATER CLOSET ADA COMPLIANT	AMSTAN ELJER KOHLER ZURN	2114A,194 091–0120–001BW K–5310 Z–5555–K	1.28 GPF TANK,TRIP LEVER AND FLOAT VALVE			166 (M) 802–0225 K–7637	ELONGATED BOWL,SIPHON JET, CHURCH 9500–C, BEMIS 1955C, ZURN Z5956SS, BENEKE 527 WHITE, SOLID PLASTIC OPEN FRONT SEAT, 17"BOWL HEIGHT, 1.6 GPF, FLOOR OUTLET
FD FLOOR DRAIN WITH ENLARGED STRAINER & WATERPROOF MEMBRANE	WADE SMITH ZURN JOSAM WATTS	W–1100–1 2010–A Z–415 30000–E FD–100–A–7	PROVIDE TRAP PRIMER AT ALL PUBLIC RESTROOMS, PLENUMS, OR OTHER LOCATIONS INDICATED ON DRAWINGS.	SATIN NICKEL BRONZE **PROVIDE ROUND OR SQUARE TYPE AS DIRECTED BY ARCHITECT**	CAST IRON DEEP SEAL P–TRAP	1/2" ROUGH STOP SEE PLAN FOR SIZE OF CONNECTION	CAST IRON BODY FLANGE, CLAMPING COLLAR, SEEPAGE OPENINGS, VAPOR BARRIER, & SATIN NICKEL BRONZE STRAINER TOP. PROVIDE STRAINER 2 PIPE SIZES LARGER CONNECTION. CONNECT TO TRAP PRIMER W/ VACUUM BREAKER AT FLUSH VA. OR PROVIDE TRAP PRIMER FITTING IN LAVATORY WASTE BELOW ADJACENT LAVATORY.
CRD LARGE COMBINATION ROOF DRAIN/ EMERGENCY DRAIN WITH ADJUSTABLE EXTENSION	WADE JR SMITH ZURN JOSAM	3041 1800 Z163 22500	PROVIDE 2" DAM FOR OVERFLOW DRAINS	CAST IRON DOME STRAINER	----- ----- -----	---- ---- ----	CAST IRON BODY WITH ADJUSTABLE EXTENSION SLEEVE, REVERSIBLE COLLAR, COMBINED FLASHING CLAMP AND GRAVEL STOP, WITH CAST IRON DOME, W/CORROSION RESISTANT BOLTS. PROVIDE ALL ACCESSORIES RECOMMENDED BY MANUFACTURER FOR ROOF CONSTRUCTION ENCOUNTERED, INCLUDING ROOF SUMP RECEIVER.
SC FREEZE PROOF SILLCOCK WITH VACUUM BREAKER	ZURN WOODFORD JOSAM WATTS MIFAB	Z–1320 B–65–C 71000 HY–725 MHY26				3/4" SIZE	NON–FREEZE TYPE WITH BRASS CASING. PROVIDE HANDLES FOR EACH SILLCOCK. NOTE WALL THICKNESS IN EACH CASE. WHERE WALL THICKNESS WILL NOT PERMIT USE OF CASING TYPE, USE ZURN Z–1345, OR WOODFORD B–74–C OR APPROVED EQUAL.

PIPE AND FITTING MATERIAL SCHEDULE

ALL PIPE AND FITTING MATERIALS SHALL CONFORM TO THE APPLICABLE PROVISIONS OF THE IPC AND THE LA. AMMENDMENTS

SERVICE	PIPE MATERIAL	JOINT TYPE	FITTING MATERIAL	REMARKS
SOIL, WASTE, VENT & STORM DRAIN PIPING ABOVE & BELOW FIRST FLOOR SLAB AND BLDG SEWER (EXTERIOR)	SCHEDULE 40 PVC, ASTM D 2665, ASTM F 891 ASTM F 1488	SOLVENT WELDED	SCHEDULE 40 PVC, ASTM D 2665 ASTM F 1866	
DOMESTIC WATER BELOW SLAB–ON–GRADE INTERIOR	TYPE "K" COPPER ASTM B–88 SOFT THRU 1 1/2", HARD FOR 2" AND LARGER	NO JOINTS THRU 1 1/2", SILVER BRAZED FOR 2" AND LARGER	WROUGHT COPPER	
DOMESTIC WATER BELOW FIRST FLOOR SLAB FOR SIZES 1 AND SMALLER. (OPTIONAL)	PEX ASTM F 877, SDR 9 TUBING RATED FOR RATED FOR 100 PSI @ 180°F	METAL–INSERT TYPE WITH COPPER CRIMP FITTINGS ABOVE SLAB	METAL–INSERT, ASTM1807	NO FITTINGS BELOW SLAB.
DOMESTIC WATER ABOVE FIRST FLOOR SLAB, INTERIOR	TYPE "L" HARD COPPER, ASTM B–88	95–5 SOLDER WITH INTERMEDIATELY CORROSIVE FLUX	WROUGHT COPPER	
DOMESTIC WATER, EXTERIOR	SCHEDULE 40 PVC ASTM D–1785,ASTM D–2241 ASTM D–2672	SOLVENT WELDED	SCHEDULE 40 PVC ASTM D–2464 ASTM D–2466 ASTM D–2467	

PLUMBING SYMBOLS

SYMBOL	DESCRIPTION
SD	STORM OR ROOF DRAINLINE BELOW FLOOR OR GRADE
SD	STORM OR ROOF DRAIN LINE ABOVE FLOOR
	SOIL OR WASTE LINE BELOW FLOOR OR GRADE
	SOIL OR WASTE LINE ABOVE FLOOR
	SEWER VENT
	COLD WATER
	HOT WATER
HB SC	HOSE BIBB, SILL COCK
CRD	COMBINATION MAIN ROOF AND OVERFLOW DRAIN W/ DECK PLATE
FD	FLOOR DRAIN
CO	CLEANOUT (INTERIOR)
SOV	SHUT OFF VALVE
WHA	WATER HAMMER ARRESTER
	GATE VALVE WITH VALVE BOX (EXTERIOR)
CO	CLEANOUT (EXTERIOR)
CO	TWO WAY CLEANOUT (EXTERIOR)
1	PLUMBING NOTE REFERENCE
	POINT OF CONNECTION
	TERMINATION OF DEMOLITION
A M1	DETAIL DESIGNATION / SHEET WHERE DETAIL IS LOCATED

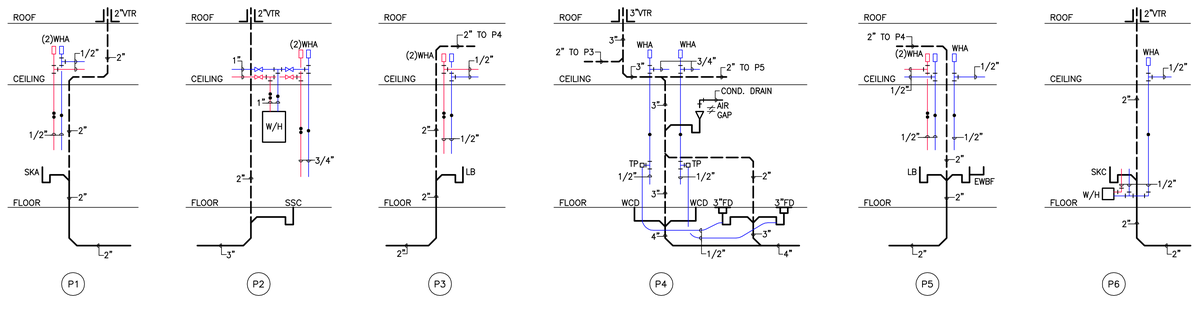

PLUMBING RISER DIAGRAMS

NO SCALE

NOTE: PROVIDE WATER HAMMER ARRESTOR OR AIR CHAMBERS AS SPECIFIED

STATE OF LOUISIANA
JOHN C. WILSON
REG. No. 19008
REGISTERED PROFESSIONAL ENGINEER IN MECHANICAL ENGINEERING
4-28-2023

JOHN J. GUTH ASSOCIATES, INC
CONSULTING MECHANICAL AND ELECTRICAL ENGINEERS
208 WILIAM STREET
SHREVEPORT, LOUISIANA 71101 7220
DESIGNER: KEVIN L. WILSON
CHECKED BY: JCW
THESE DRAWINGS DO NOT INCLUDE NECESSARY COMPONENTS FOR CONSTRUCTION SAFETY.

ASHE | BROUSSARD | WEINZETTLE ARCHITECTS

This drawing and design are the property of Ashe Broussard Weinzettle Architects. They are submitted on the condition that they are not to be used, reproduced, or copied, in whole or in part, or used for furnishing information to others, without the prior written consent of Ashe Broussard Weinzettle Architects. All common law rights of copyright and otherwise are hereby specifically reserved.

REVISIONS

revision	description	date
	-	-
	-	-

RED RIVER BANK
1918 Veterans Boulevard
Metairie, Louisiana 70005

sheet contents: PLUMBING SCHEDULES & DETAILS

project no. 2021.53
drawn KLW
checked JCW
project date April 2023
drawing no. P0.0

DATE DRAWING LAST SAVED: 03/29/23 TIME:13:48:18 DATE DRAWING LAST PLOTTED: 04/24/23 TIME:10:41:35

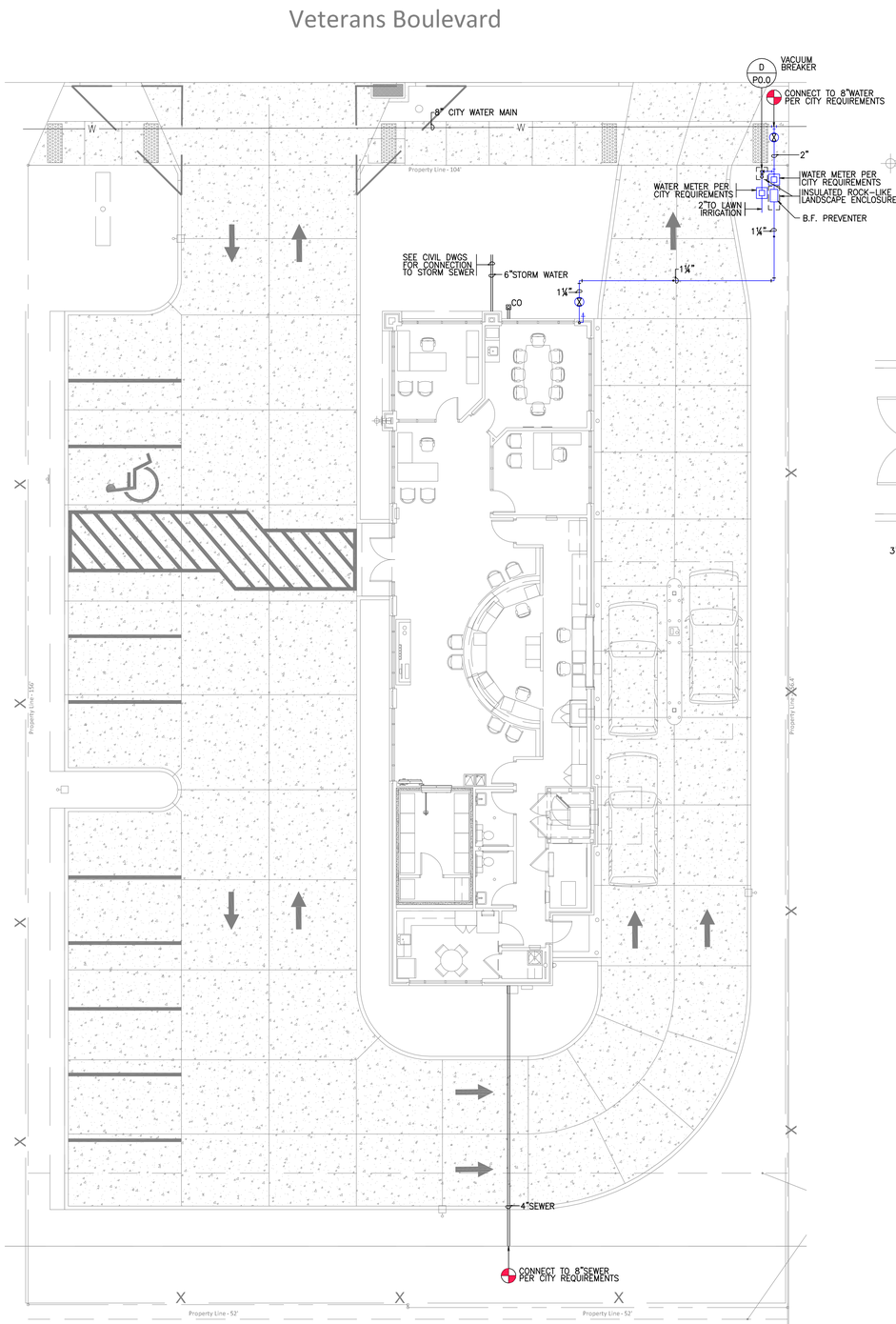

SITE PLAN 1/8"=1'-0"
PLUMBING

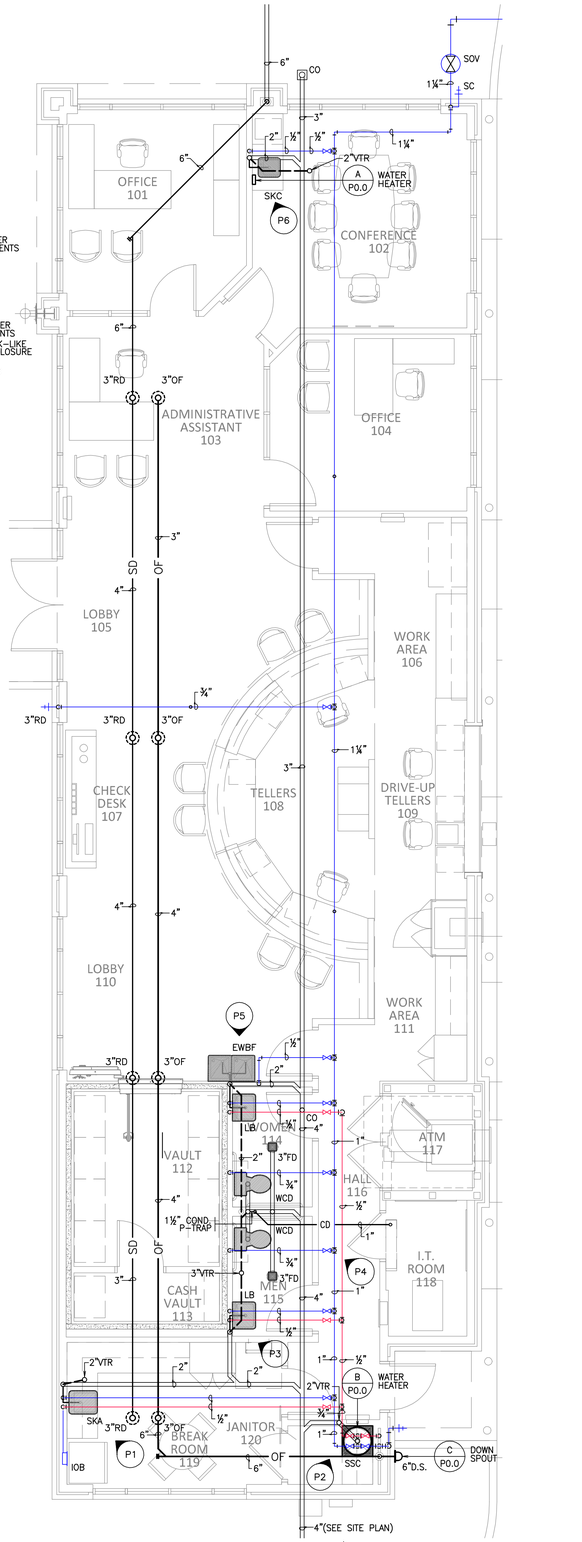

FLOOR PLAN 1/4"=1'-0"
PLUMBING

12" 0" 5' 10'
SCALE: 1/4 INCH = 1 FOOT

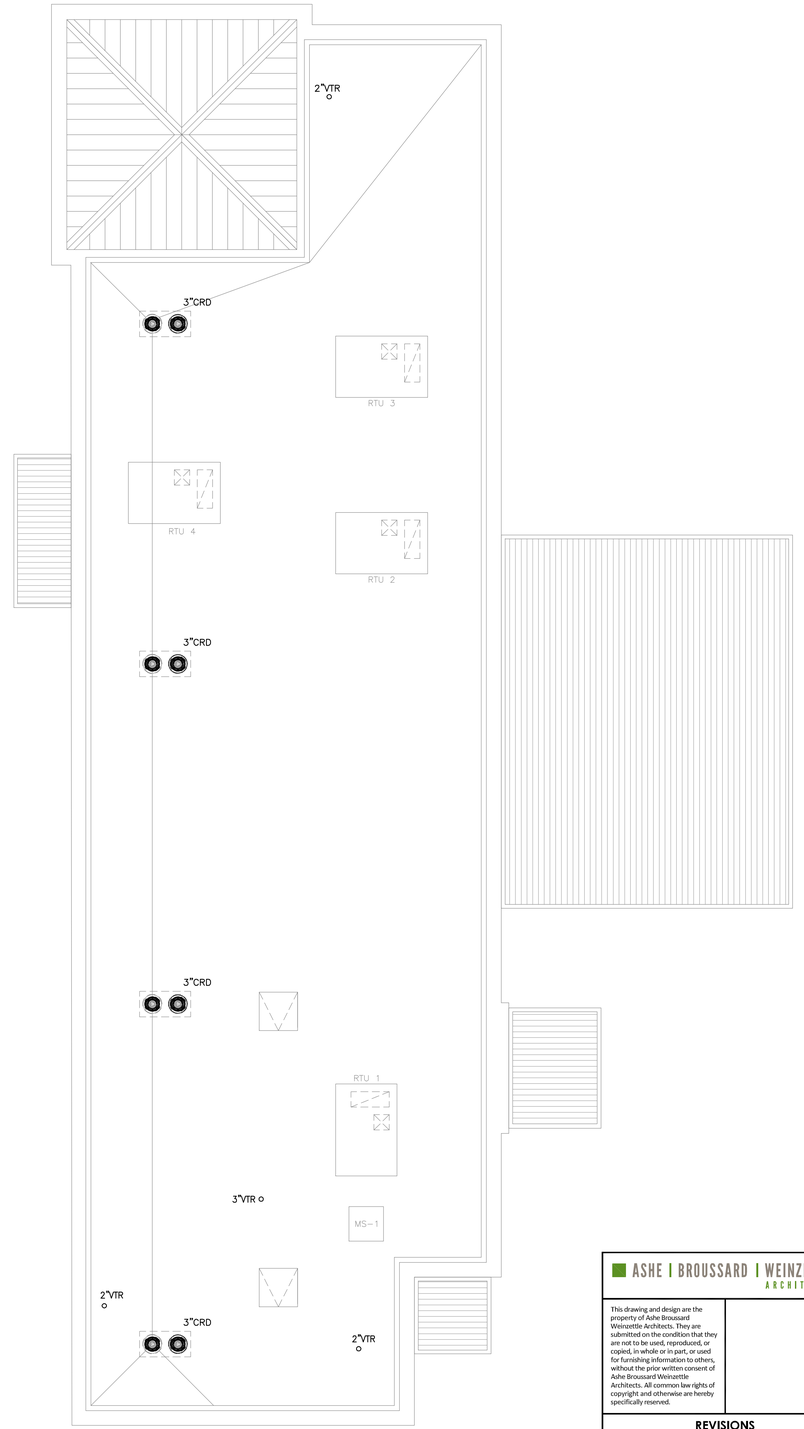

ROOF PLAN 1/4"=1'-0"
PLUMBING

12" 0" 5' 10'
SCALE: 1/4 INCH = 1 FOOT

12" 0" 5' 10' 15' 20' 25'
SCALE: 1/8 INCH = 1 FOOT

STATE OF LOUISIANA
JOHN C. WILSON
REG. No. 19008
REGISTERED
PROFESSIONAL ENGINEER
IN
MECHANICAL ENGINEERING
4-26-2023

JOHN J. GUTH ASSOCIATES, INC
CONSULTING MECHANICAL AND ELECTRICAL ENGINEERS
208 MILAM STREET
SHREVEPORT, LOUISIANA 71101 7220

DESIGNER: KEVIN L. WILSON

CHECKED BY: JCW

THESE DRAWINGS DO NOT INCLUDE NECESSARY COMPONENTS FOR CONSTRUCTION SAFETY.

ASHE | BROUSSARD | WEINZETTLE
ARCHITECTS

This drawing and design are the property of Ashe Broussard Weinzettle Architects. They are submitted on the condition that they are not to be used, reproduced, or copied, in whole or in part, or used for furnishing information to others, without the prior written consent of Ashe Broussard Weinzettle Architects. All common law rights of copyright and otherwise are hereby specifically reserved.

REVISIONS

revision	description	date
	-	-
	-	-

RED RIVER BANK

1918 Veterans Boulevard
Metairie, Louisiana 70005

project no. 2021.53
drawn KLW
checked JCW
project date April 2023

sheet contents
SITE PLAN, FLOOR PLAN & ROOF PLAN - PLUMBING

drawing no. P1.0

DATE DRAWING LAST SAVED: 04/17/23 TIME:11:16:18 DATE DRAWING LAST PLOTTED: 04/24/23 TIME:10:42:08

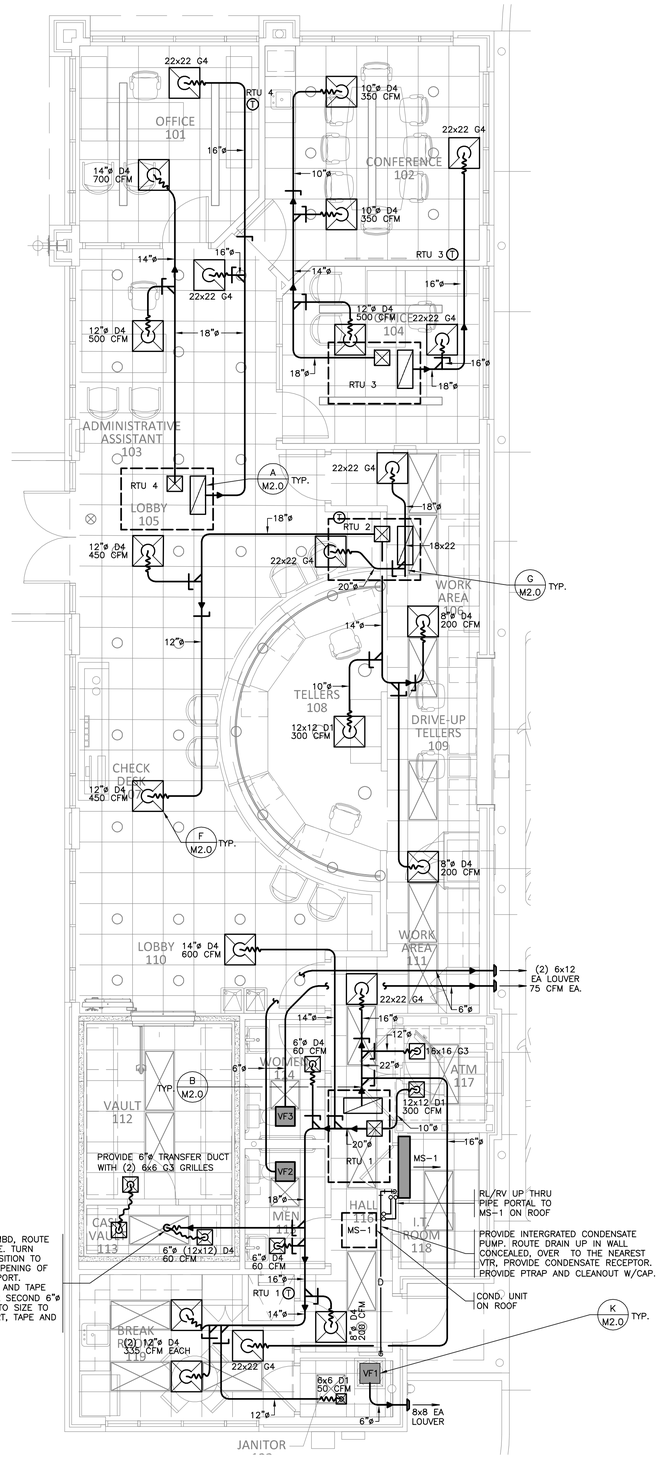

FLOOR PLAN 1/4"=1'-0"
HVAC

N

GENERAL NOTES:

1 COORDINATE FINAL LOCATIONS OF GRILLES AND DIFFUSERS WITH FINAL LOCATION OF LIGHTS, CEILING GRID, AND OTHER EQUIPMENT ON CEILING. SHIFT DIFFUSERS AND GRILLES TO MATCH LOCATION OF AVAILIBLE CEILING TILE WHERE NEEDED. EXTEND BRANCH DUCTS AS NEEDED TO ADAPT TO FINAL CONSTRUCTION.

2 FLEXIBLE DUCTS SHALL NOT BE LONGER THAN 3' MAXIMUM UNLESS OTHERWISE SHOWN ON DRAWING. THEY SHALL BE INSTALLED IN A STRAIGHT AND SMOOTH PATH TO ALLOW AIR TO FLOW WELL, AVOIDING HARD TURNS AND SHARP BENDS OR EXCESSIVE DUCT.

3 IF NOT OTHERWISE SHOWN, A UNIT'S THERMOSTAT SHALL BE PROVIDED ON AN INTERIOR WALL NEAR THE LOCATION OF A LARGE RETURN GRILL ASSOCIATED WITH THAT UNIT.

4 OUTSIDE AIR INTAKES ON ROOF AND/OR WALLS SHOULD BE LOCATED 10 FEET MINIMUM FROM ANY EXHAUST AIR. OFFSET FINAL LOCATION OF OUTSIDE AIR AND EXTEND DUCT AS NEEDED TO COORDINATE WITH FINAL LOCATION OF EXHAUST AND PLUMBING VENTS.

5 FOR EXHAUST DUCTS NOT ALREADY SHOWN TO RUN TO ROOF CAP, ROUTE VENT DUCT FROM VENTILATION FAN AND TRANSITION TO EXTERIOR WALL LOUVER SIZE. PROVIDE AND COORDINATE WALL LOUVER AND COLOR WITH ARCHITECT IF NOT OTHERWISE SHOWN.

6 PROVIDE FUSABLE LINK TYPE FIREDAMPERS IN DUCT AT ANY RATED WALL PENETRATION LOCATIONS. VERIFY RATED WALL LOCATIONS WITH ARCHITECTURAL IN NEW AREAS. IN ANY AREAS WHERE CEILINGS ARE RATED INSTEAD OF WALLS, PROVIDE RADIATION DAMPERS AT GRILLES AND DIFFUSERS IN LIEU OF FIREDAMPERS IN WALL. VERIFY ON ARCHITECTURAL PLANS.

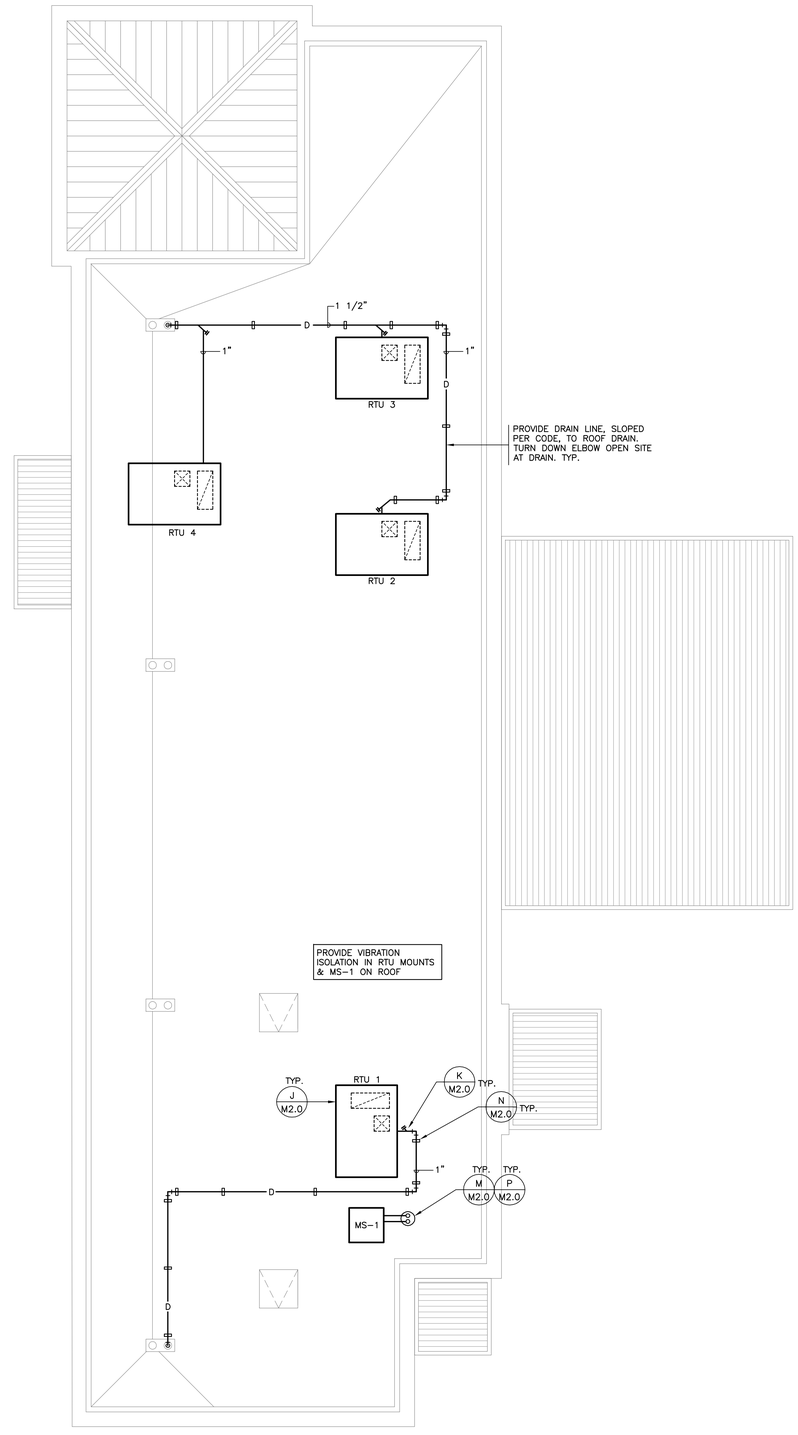

ROOF PLAN 1/4"=1'-0"
HVAC

N

12" 0" 5' 10'
SCALE: 1/4 INCH = 1 FOOT

STATE OF LOUISIANA
JOHN C. WILSON
REG. No. 19008
REGISTERED
PROFESSIONAL ENGINEER
IN
MECHANICAL ENGINEERING
4-24-2023

JOHN J. GUTH ASSOCIATES, INC
CONSULTING MECHANICAL AND ELECTRICAL ENGINEERS
208 MLAM STREET
SHREVEPORT, LOUISIANA 71101 7220

DESIGNER: GREG T. GRIMES

CHECKED BY: JCW

THESE DRAWINGS DO NOT INCLUDE NECESSARY COMPONENTS FOR CONSTRUCTION SAFETY.

ASHE | BROUSSARD | WEINZETTLE ARCHITECTS

This drawing and design are the property of Ashe Broussard Weinzettle Architects. They are submitted on the condition that they are not to be used, reproduced, or copied, in whole or in part, or used for furnishing information to others, without the prior written consent of Ashe Broussard Weinzettle Architects. All common law rights of copyright and otherwise are hereby specifically reserved.

REVISIONS

revision	description	date
	-	-
	-	-

RED RIVER BANK

1918 Veterans Boulevard
Metairie, Louisiana 70005

project no. 2021.53
drawn SGI
checked JCW
project date April 2023

sheet contents
FLOOR PLAN & ROOF PLAN - HVAC

drawing no. M1.0

DATE DRAWING LAST SAVED: 04/24/23 TIME: 10:42:45
DATE DRAWING LAST PLOTTED: 04/24/23 TIME: 10:42:46

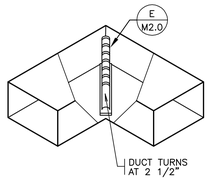

A DETAIL–TYPICAL ELBOW
NO SCALE

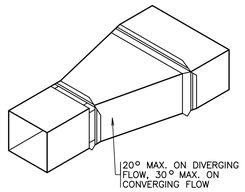

B DETAIL–DUCT TAPER
NO SCALE

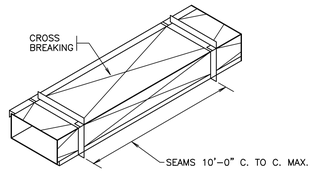

C DETAIL–DUCT WITH CROSS BREAKING
NO SCALE

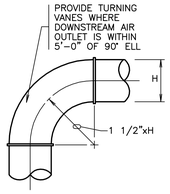

D DETAIL–FULL RADIUS ELBOW
NO SCALE

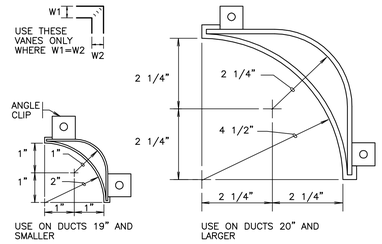

E DETAIL–TYPICAL TURNING VANES
NO SCALE

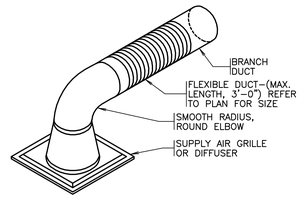

F DETAIL–ROUND NECK DIFFUSER
NO SCALE

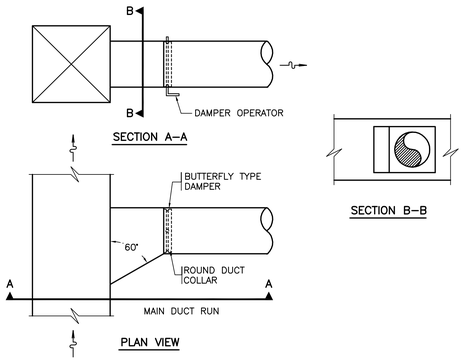

G DETAIL–TAKE–OFF/RECTANGULAR TO ROUND
NO SCALE

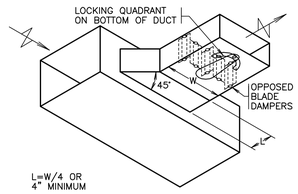

H DETAIL–TYPICAL BRANCH TAKE–OFF
NO SCALE

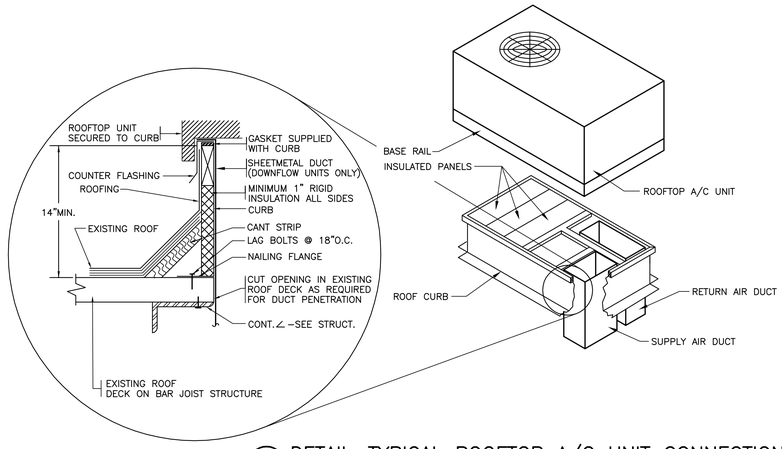

J DETAIL–TYPICAL ROOFTOP A/C UNIT CONNECTION
3/8"=1'–0" (APPROXIMATE)

NOTE: PROVIDE ISOLATION RAILS FOR ROOFTOP UNITS 7½ TONS AND LARGER. REFER TO DETAIL L THIS SHEET.

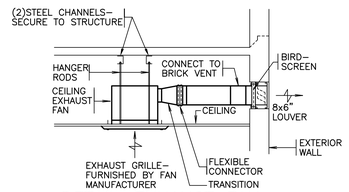

K DETAIL–EXHAUST FAN
NO SCALE

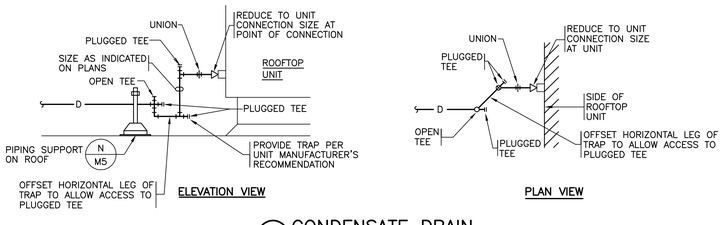

L CONDENSATE DRAIN CONNECTION
NO SCALE

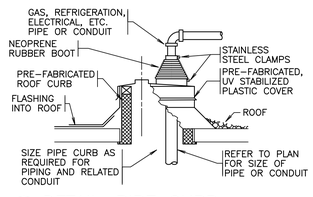

M DETAIL–PIPE CURB ASSEMBLY
NO SCALE

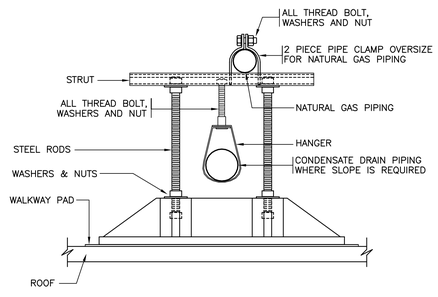

N DETAIL–PIPE SUPPORT ON ROOF
NO SCALE
PIPE SIZES 2 1/2" AND SMALLER

NOTES:

1. PROVIDE WALKWAY PAD AS RECOMMENDED BY ROOFING MANUFACTURER.
2. PIPE SUPPORT SHALL BE ONE OF THE FOLLOWING OR APPROVED EQUAL:
   A. PORTABLE PIPE HANGERS, INC. MODEL PP10SH.
   B. MAPA PRODUCTS, MODEL MS–3.
3. ALL STRUTS, RODS, WASHERS, NUTS, BOLTS, CLAMPS, ETC. SHALL BE HOT DIPPED GALVANIZED (ASTM A123).
4. PROVIDE CARBON STEEL HANGER WITH COPPER PLATED FINISH FOR UNINSULATED COPPER PIPE.

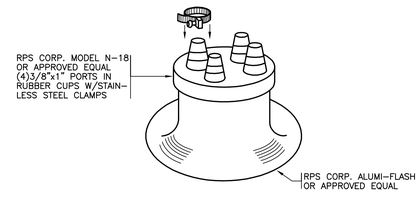

P ROOF PIPE PORTAL DETAIL
NO SCALE

12" 0" 5' 10'
SCALE: 1/4 INCH = 1 FOOT

STATE OF LOUISIANA
JOHN C. WILSON
REG. No. 19008
REGISTERED
PROFESSIONAL ENGINEER
IN
MECHANICAL ENGINEERING
4-24-2023

JOHN J. GUTH ASSOCIATES, INC
CONSULTING MECHANICAL AND ELECTRICAL ENGINEERS
208 MILAM STREET
SHREVEPORT, LOUISIANA 71101 7220
DESIGNER: GREG T. GRIMES
CHECKED BY: JCW
THESE DRAWINGS DO NOT INCLUDE NECESSARY COMPONENTS FOR CONSTRUCTION SAFETY.

ASHE | BROUSSARD | WEINZETTLE ARCHITECTS

This drawing and design are the property of Ashe Broussard Weinzettle Architects. They are submitted on the condition that they are not to be used, reproduced, or copied, in whole or in part, or used for furnishing information to others, without the prior written consent of Ashe Broussard Weinzettle Architects. All common law rights of copyright and otherwise are hereby specifically reserved.

REVISIONS

revision	description	date
	-	-
	-	-

RED RIVER BANK
1918 Veterans Boulevard
Metairie, Louisiana 70005

project no. 2021.53
drawn SGI
checked JCW
project date April 2023

sheet contents: MECHANICAL DETAILS - HVAC

drawing no. M2.0

DATE DRAWING LAST SAVED: 04/24/23 TIME: 10:43:13
DATE DRAWING LAST PLOTTED: 04/24/23 TIME: 10:43:14

AIR CONDITIONING SYMBOLS

SYMBOL	DESCRIPTION
——RL——	REFRIGERANT LIQUID
——RS——	REFRIGERANT SUCTION
——RV——	REFRIGERANT VAPOR LINE
——D——	CONDENSATE DRAIN LINE
(T)	ROOM THERMOSTAT
(F)	FIRE DAMPER
SA,RA,OA	SUPPLY AIR, RETURN AIR, OUTSIDE AIR
D1,R1,G1	AIR DIFFUSER, AIR REGISTER, AIR GRILLE (SEE SCHEDULE)
⊠	SUPPLY AIR DIFFUSER
⧄	RETURN OR EXHAUST AIR
(M1)	MECHANICAL NOTE REFERENCE
◕	POINT OF CONNECTION
(X / XX)	DETAIL DESIGNATION SHEET WHERE DETAIL IS LOCATED

PIPE AND FITTING MATERIAL SCHEDULE

SERVICE	PIPE MATERIAL	JOINT TYPE	FITTING MATERIAL	REMARKS
CONDENSATE DRAIN PIPING	TYPE "L" HARD COPPER ASTM B-88	50-50 SOLDER WITH INTERMEDIATELY CORROSIVE FLUX	WROUGHT COPPER	
CONDENSATE DRAIN PIPING	SCHEDULE 40 PVC	SOLVENT WELDED	SCHEDULE 40 PVC,	PROVIDE TEE WITH PLUG AT EACH 90 DEGREE ELL
REFRIGERANT PIPING	REFRIGERANT SERVICE (SEALED) TYPE "L" COPPER, ASTM B-88	SIL-FOS (SILVER BRAZED)	WROUGHT COPPER	

GRILLE, REGISTER & DIFFUSER SCHEDULE

SYMBOL	TYPE	MANUFACTURER	CATALOG NO.	FINISH	REMARKS
D1	SQUARE/RECTANGULAR NECK LOUVERED FACE DIFFUSER	TITUS KRUEGER PRICE	TDC-AA-6 5SH-F21 AMD-6/VCS-3	OFF-WHITE BAKED ENAMEL	ALUMINUM CONSTRUCTION OPPOSED BLADE DAMPER DROP BEVEL FRAME
D4	ROUND NECK SQUARE CONE FACE DIFFUSER LAY-IN FRAME	TITUS KRUEGER PRICE METAL AIRE	TMS-AA-3 51400 ASCD-31 5700-6 AL	OFF-WHITE BAKED ENAMEL	ALUMINUM CONSTRUCTION, NON-ADJUSTABLE DIFFUSER
G3	GRID CORE FLANGED CEILING RETURN/ EXHAUST GRILLE	TITUS KRUEGER PRICE	50F-1 EGC-5 80-F	OFF-WHITE BAKED ENAMEL	1/2"X1/2"X1/2" ALUMINUM GRID
G4	GRID CORE LAY-IN CEILING RETURN/ EXHAUST GRILLE	TITUS KRUEGER PRICE	50F-3 EGC-5-TB 80-TB	OFF-WHITE BAKED ENAMEL	1/2"X1/2"X1/2" ALUMINUM GRID
G5	LOUVERED FACE WALL RETURN/ EXHAUST GRILLE	TITUS KRUEGER PRICE	350FL S580-H-F851 630-F-L	ALUMINUM BAKED ENAMEL	ALUMINUM CONSTRUCTION 3/4" BLADE SPACING, BLADES FIXED AT 35° OR 45° DEFLECTION BLADES PARALLEL TO LONG DIMENSION
R1	LOUVERED FACE, DOUBLE DEFLECTION SIDEWALL SUPPLY REGISTER	TITUS KRUEGER PRICE	300-FL 5880H-OBD 620D	ALUMINUM BAKED ENAMEL	ALUMINUM CONSTRUCTION OBD, 3/4" BLADE SPACING FINS IN HORIZONTAL POSITION

AIR UNIT, D-X COIL & CONDENSING UNIT SCHEDULE (MINI-SPLIT HEAT PUMP)

UNIT NO.	BLOWER FAN DATA						COOLING(95° AMB)				HEATER		OUTDOOR UNIT				PIPE SIZES			REMARKS
	TOTAL CFM	RUN AMPS	HP	VOLTAGE	RPM	DRIVE	TOT MBH	P/T/H	ENT AIR°F DB	ENT AIR°F WB	MBH	ENT AIR°F DB/WB	MIN SEER	MCA	FUSE SIZE	VOLTAGE	RS	RL	DR	
MS-1	530	0.20	-	230V - 1Ø	-	-	22.0	6.3	80	67	22.00	80 / 67	15.0	15.8	20.0	230V - 1Ø	5/8"	1/4"	11/16"	WALL MOUNTED

NOTES: (1) PROVIDE SINGLE POINT CONNECTION

ROOFTOP AIR CONDITIONING EQUIPMENT SCHEDULE

UNIT NO.	EVAPORATOR FAN					COOLING (95° AMB)				HEATING		ELECTRICAL		MIN SEER	REMARKS
	CFM	EXT SP	HP	VOLTAGE	RPM	DRIVE	TOT MBH	SEN MBH	ENT AIR°F DB	ENT AIR°F WB	KW	VOLTAGE	FUSE SIZE	VOLTAGE		
RTU1	2,000	0.5"	1	230V-1Ø	VAR	DIRECT	58.0	46.4	80	67	13.8	230V-1Ø	90	230V-1Ø	13.0	OA = 400 CFM
RTU2	1,600	0.5"	1	230V-1Ø	VAR	DIRECT	48.0	38.4	80	67	10.0	230V-1Ø	70	230V-1Ø	13.0	OA = 320 CFM
RTU3	1,200	0.5"	3/4	230V-1Ø	VAR	DIRECT	35.0	28.0	80	67	10.0	230V-1Ø	60	230V-1Ø	13.0	OA = 240 CFM
RTU4	1,200	0.5"	3/4	230V-1Ø	VAR	DIRECT	35.0	28.0	80	67	10.0	230V-1Ø	60	230V-1Ø	13.0	OA = 240 CFM

NOTES: (1) PROVIDE SINGLE POINT CONNECTION FOR EACH UNIT.
(2) PROVIDE VARIABLE SPEED UNITS CAPABLE OF RUNNING AT PARTIAL LOAD.
(3) PROVIDE SMOKE DETECTORS IN SUPPLY AND RETURN PER CODE FOR EACH UNIT TO CUT OFF UNIT WHEN TRIPPED.
PROVIDE AUDIO VISUAL DEVICE PER CODE IN CEILING, IN A CONSPICUOUS LOCATION, TIED TO SMOKE DETECTORS.

VENTILATION FAN SCHEDULE

MARK	SERVICE	CFM	SP	SONES (MAX)	MAX RPM	DRIVE	WATTS	VOLTAGE	REMARKS
VF1	JANITOR 120	75	0.25	2.0	1100	DIRECT	45	115V-1Ø	CEILING CABINET
VF2	MEN 115	75	0.25	2.0	1100	DIRECT	45	115V-1Ø	CEILING CABINET
VF3	WOMEN 114	75	0.25	2.0	1100	DIRECT	45	115V-1Ø	CEILING CABINET

NOTE: PROVIDE SOLID STATE VARIABLE FAN SPEED CONTROL

STATE OF LOUISIANA
JOHN C. WILSON
REG. No. 19008
REGISTERED
PROFESSIONAL ENGINEER
IN
MECHANICAL ENGINEERING
4-24-2023

JOHN J. GUTH ASSOCIATES, INC
CONSULTING MECHANICAL AND ELECTRICAL ENGINEERS
208 MILAM STREET
SHREVEPORT, LOUISIANA 71101
7220

DESIGNER: GREG T. GRIMES

CHECKED BY: JCW

THESE DRAWINGS DO NOT INCLUDE NECESSARY COMPONENTS FOR CONSTRUCTION SAFETY.

ASHE | BROUSSARD | WEINZETTLE
ARCHITECTS

This drawing and design are the property of Ashe Broussard Weinzettle Architects. They are submitted on the condition that they are not to be used, reproduced, or copied, in whole or in part, or used for furnishing information to others, without the prior written consent of Ashe Broussard Weinzettle Architects. All common law rights of copyright and otherwise are hereby specifically reserved.

REVISIONS

revision	description	date
	-	-
	-	-

RED RIVER BANK

1918 Veterans Boulevard
Metairie, Louisiana 70005

project no. 2021.53
drawn SGI
checked GTG
project date April 2023

sheet contents: MECHANICAL SCHEDULES - HVAC

drawing no. M3.0

DATE DRAWING LAST SAVED: 04/24/23 TIME:10:43:39
DATE DRAWING LAST PLOTTED: 04/24/23 TIME:10:43:40

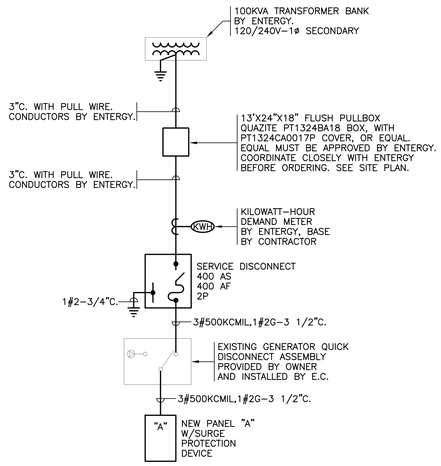

SINGLE LINE DIAGRAM NO SCALE
POWER

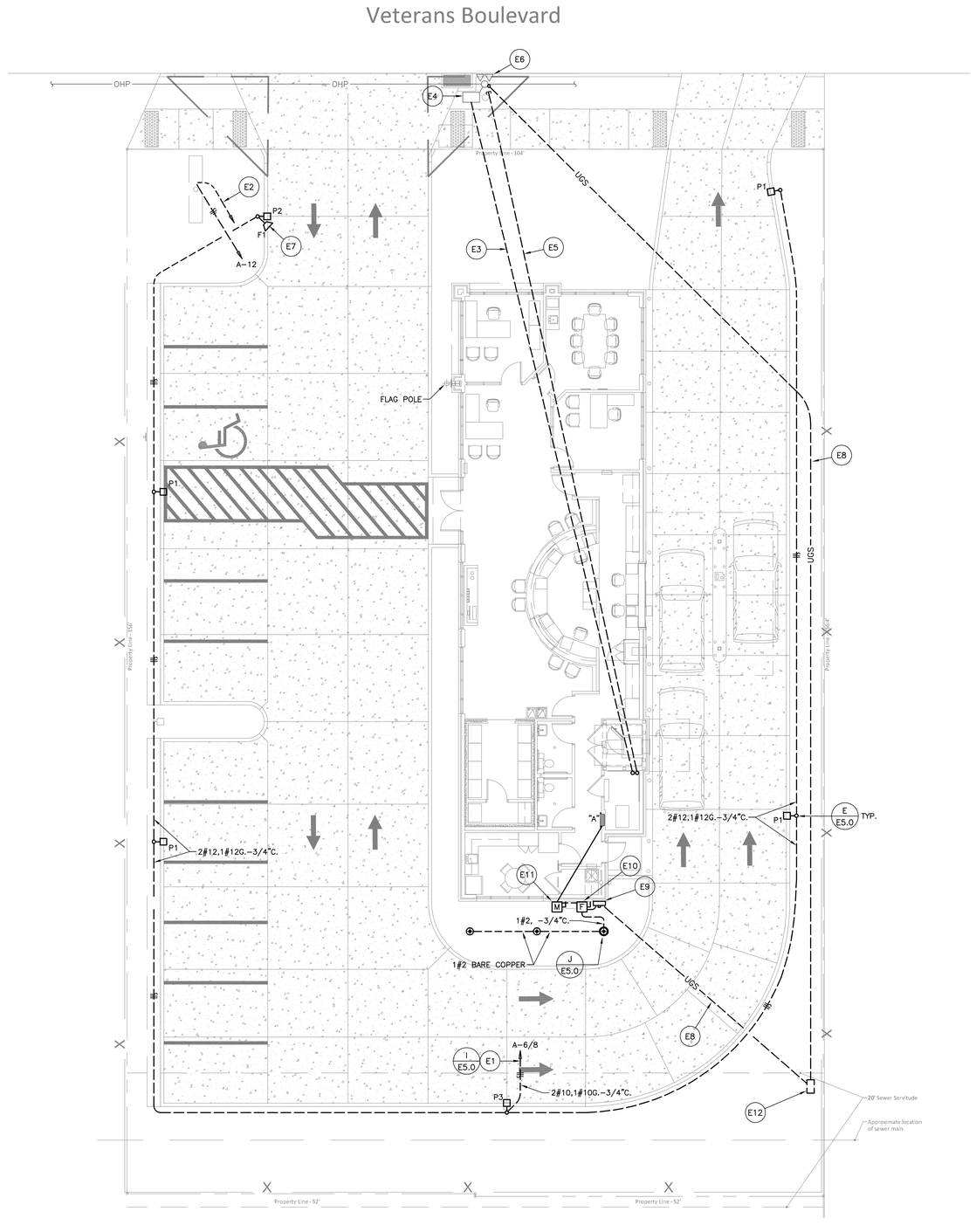

SITE PLAN 1/8"=1'-0"
ELECTRICAL

N

12" 0" 5' 10' 15' 20' 25'
SCALE: 1/8 INCH = 1 FOOT

ELECTRICAL NOTES: (THIS SHEET ONLY)

- (E1) THROUGH OUTSIDE LIGHTING CONTACTOR.
- (E2) 3/4" CONDUIT, WITH PULL WIRE, FROM I.T. ROOM 108 TO SIGN FOR SIGN DATA.
- (E3) 2" CONDUIT, WITH PULL WIRE, FROM I.T. ROOM 108 TO EXISTING UTILITY IN-GROUND PULL BOX FOR FIBER OPTIC SERVICE. VERIFY EXACT LOCATION AND REQUIREMENTS WITH UTILITY SERVICE.
- (E4) EXISTING UTILITY FIBER OPTICS PULL BOX.
- (E5) 2" CONDUIT, WITH PULL WIRE, FROM I.T. ROOM 108 TO EXISTING UTILITY SERVICE POLE FOR FUTURE UTILITY SERVICE.
- (E6) EXISTING ELECTRIC SERVICE UTILITY POLE AND TRANSFORMERS.
- (E7) AIM F1 FLOODLIGHT TO MAXIMIZE LIGHT ON FLAG.
- (E8) 3" CONDUIT, WITH PULL WIRE, FROM EXISTING SERVICE POLE, THROUGH PULL BOX, TO NEW SELF CONTAINED METER ON BACK OF BUILDING. RISE UP POLE AS DIRECTED BY ENTERGY. COORDINATE CLOSELY WITH POWER COMPANY BEFORE BEGINNING WORK.
- (E9) SELF CONTAINED METER. METER BASE PROVIDED BY CONTRACTOR, METER PROVIDED BY ENTERGY.
- (E10) 400A NEMA-3R FUSED SERVICE DISCONNECT BY CONTRACTOR. SEE RISER DIAGRAM ON THIS SHEET.
- (E11) EXISTING GENERATOR QUICK DISCONNECT ASSEMBLY PROVIDED BY OWNER AND INSTALLED BY ELECTRICAL CONTRACTOR.
- (E12) 13"X24"X18" FLUSH PULL BOX FOR UNDERGROUND SECONDARY CONDUCTORS. QUAZITE PT1324BA18 BOX, WITH PT1324CA0017P COVER, OR EQUAL. EQUAL MUST BE APPROVED BY ENTERGY. COORDINATE CLOSELY WITH ENTERGY BEFORE ORDERING.

DATE DRAWING LAST SAVED:04/24/23 TIME:10:37:32
DATE DRAWING LAST PLOTTED: 04/24/23 TIME:10:37:32

ASHE | BROUSSARD | WEINZETTLE ARCHITECTS

This drawing and design are the property of Ashe Broussard Weinzettle Architects. They are submitted on the condition that they are not to be used, reproduced, or copied, in whole or in part, or used for furnishing information to others, without the prior written consent of Ashe Broussard Weinzettle Architects. All common law rights of copyright and otherwise are hereby specifically reserved.

REVISIONS

revision	description	date
	-	-
	-	-

STATE OF LOUISIANA
J. P. FOREMAN
REG. No. 22378
REGISTERED
PROFESSIONAL
ELECTRICAL ENGINEER
4-24-2023

JOHN J. GUTH ASSOCIATES, INC
CONSULTING MECHANICAL AND ELECTRICAL ENGINEERS
208 MILAM STREET
SHREVEPORT, LOUISIANA 71101 7220
DESIGNER: J. PATRICK FOREMAN, P.E.

CHECKED BY: JPF

THESE DRAWINGS DO NOT INCLUDE NECESSARY COMPONENTS FOR CONSTRUCTION SAFETY.

RED RIVER BANK

1918 Veterans Boulevard
Metairie, Louisiana 70005

project no. 2021.53
drawn MAD
checked JPF
project date April 2023

sheet contents
SITE PLAN - ELECTRICAL

drawing no. ES1.0

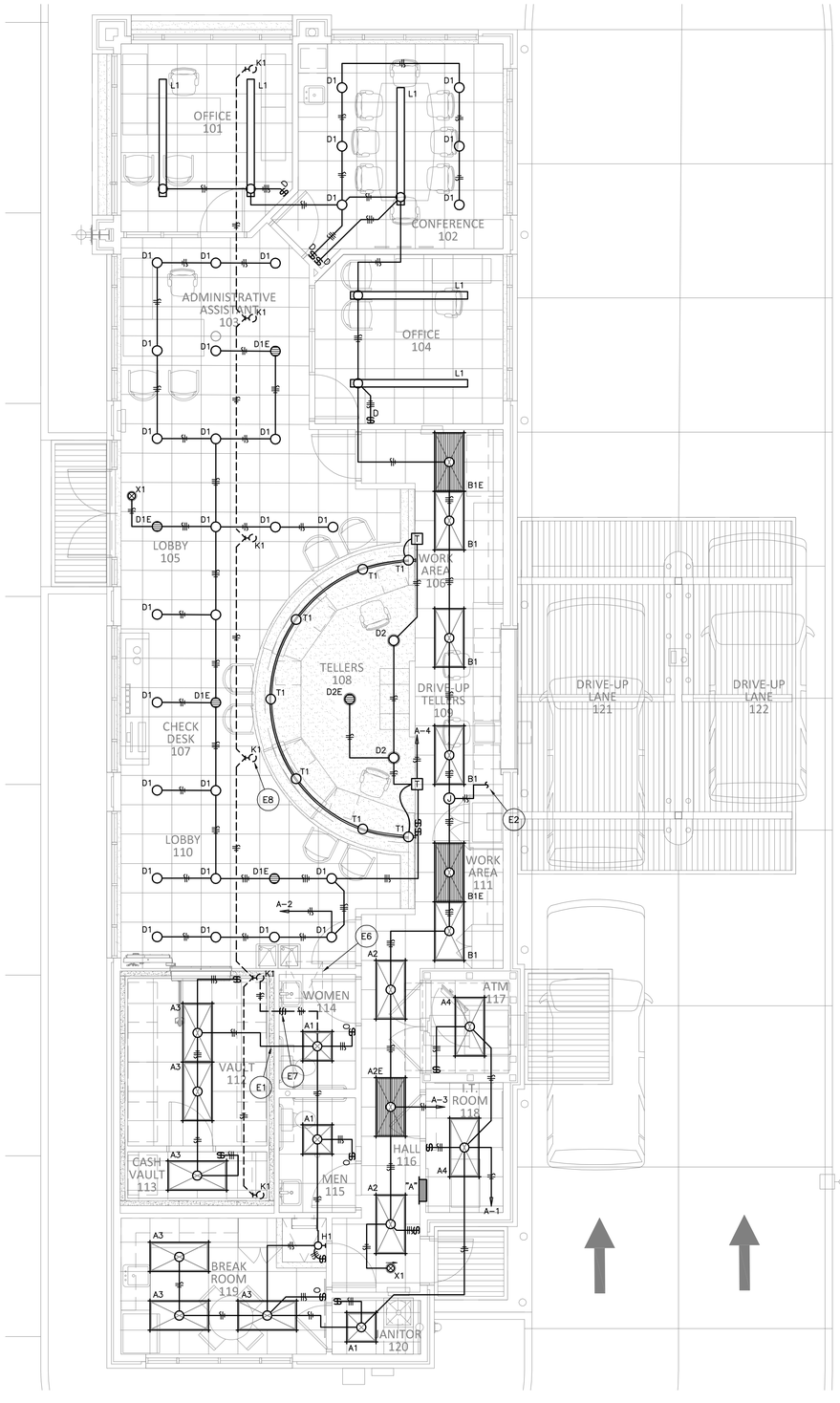

FLOOR PLAN 1/4"=1'-0"
LIGHTING

N

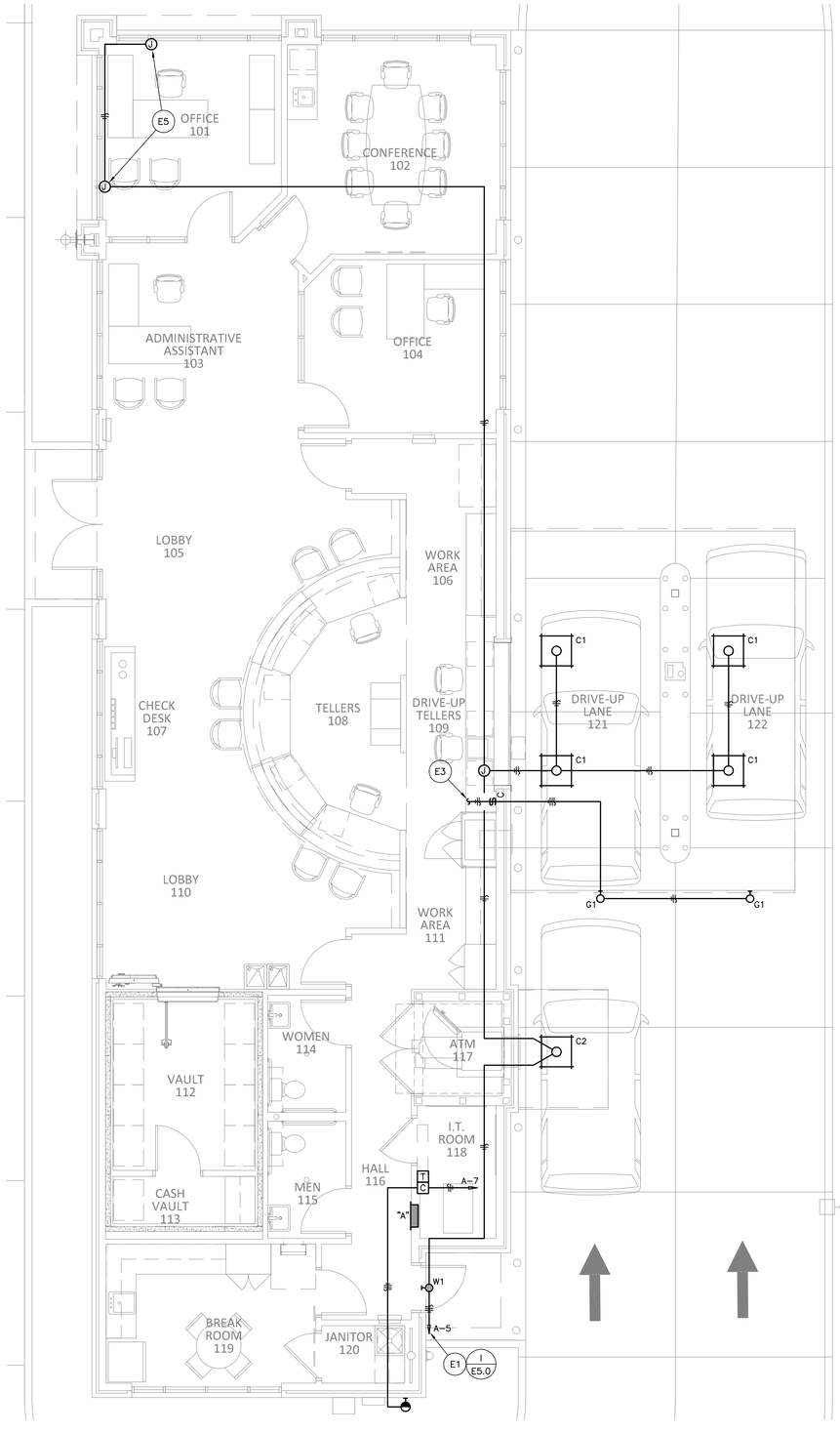

FLOOR PLAN 1/4"=1'-0"
EXTERIOR LIGHTING

N

ELECTRICAL NOTES: (THIS SHEET ONLY)

E1 THROUGH EXTERIOR LIGHTING CONTACTOR. PROVIDE ONE SWITCHED LEG, THROUGH CONTACTOR, FOR LIGHTING CONTROL, AND ONE UNSWITCHED LEG, BYPASSING CONTACTOR, FOR CONNECTING TO EMERGENCY BATTERY PACK.

E2 TO LANE OPEN/CLOSED SIGN CONTROL. SEE EXTERIOR LIGHTING PLAN ON THIS SHEET FOR CONTINUATION.

E3 FROM B1 FIXTURES IN TELLER'S AREA. SEE LIGHTING FLOOR PLAN ON THIS SHEET FOR CONTINUATION.

E4 FROM B1 FIXTURES IN TELLER'S AREA. SEE LIGHTING FLOOR PLAN ON THIS SHEET FOR CONTINUATION.

E5 ON WALL, IN ATTIC SPACE, AT OUTDOOR SIGN. VERIFY EXACT LOCATION AND REQUIREMENTS WITH ARCHITECT BEFORE ROUGHING IN.

E6 ATTIC ACCESS HATCH ON ROOF.

E7 PROVIDE A LIGHTING TOGGLE SWITCH IN ATTIC SPACE, AT ATTIC SPACE HATCH. COORDINATE WITH ARCHITECT FOR LOCATION OF SWITCH FOR EASE OF ACCESS AT HATCH.

E8 K1 LIGHT FIXTURE IN ATTIC SPACE. MOUNT OF ROOF TRUSS, AS DIRECTED BY ARCHITECT, TO LIGHT ATTIC SPACE CATWALK. TYPICAL FOR ALL K1 FIXTURES.

12" 0" 5' 10'
SCALE: 1/4 INCH = 1 FOOT

ASHE | BROUSSARD | WEINZETTLE ARCHITECTS

This drawing and design are the property of Ashe Broussard Weinzettle Architects. They are submitted on the condition that they are not to be used, reproduced, or copied, in whole or in part, or used for furnishing information to others, without the prior written consent of Ashe Broussard Weinzettle Architects. All common law rights of copyright and otherwise are hereby specifically reserved.

REVISIONS

revision	description	date
	-	-
	-	-

STATE OF LOUISIANA
J. P. FOREMAN
REG. No. 22378
REGISTERED PROFESSIONAL ENGINEER IN ELECTRICAL ENGINEERING
4-24-2023

JOHN J. GUTH ASSOCIATES, INC
CONSULTING MECHANICAL AND ELECTRICAL ENGINEERS
208 MILAM STREET
SHREVEPORT, LOUISIANA 71101 7220
DESIGNER: MICHAEL J. CLARK

CHECKED BY: JPF

THESE DRAWINGS DO NOT INCLUDE NECESSARY COMPONENTS FOR CONSTRUCTION SAFETY.

RED RIVER BANK

1918 Veterans Boulevard
Metairie, Louisiana 70005

project no. 2021.53
drawn MAD
checked JPF
project date April 2023

sheet contents
SITE PLAN, FLOOR PLAN & ROOF PLAN - LIGHTING

drawing no. E1.0

DATE DRAWING LAST SAVED: 03/29/23 TIME:14:22:54 DATE DRAWING LAST PLOTTED: 04/24/23 TIME:10:32:50

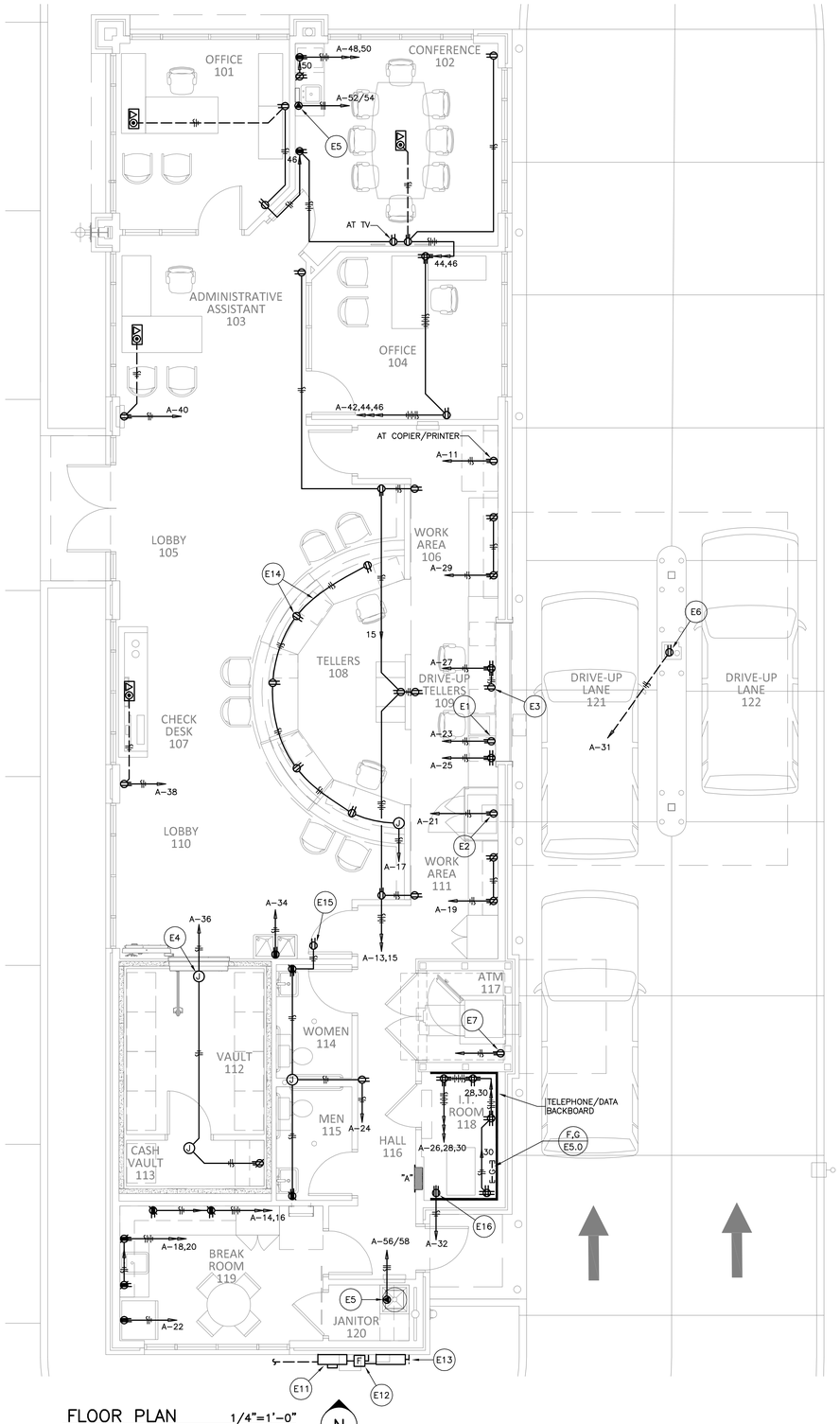

FLOOR PLAN 1/4"=1'-0"
POWER

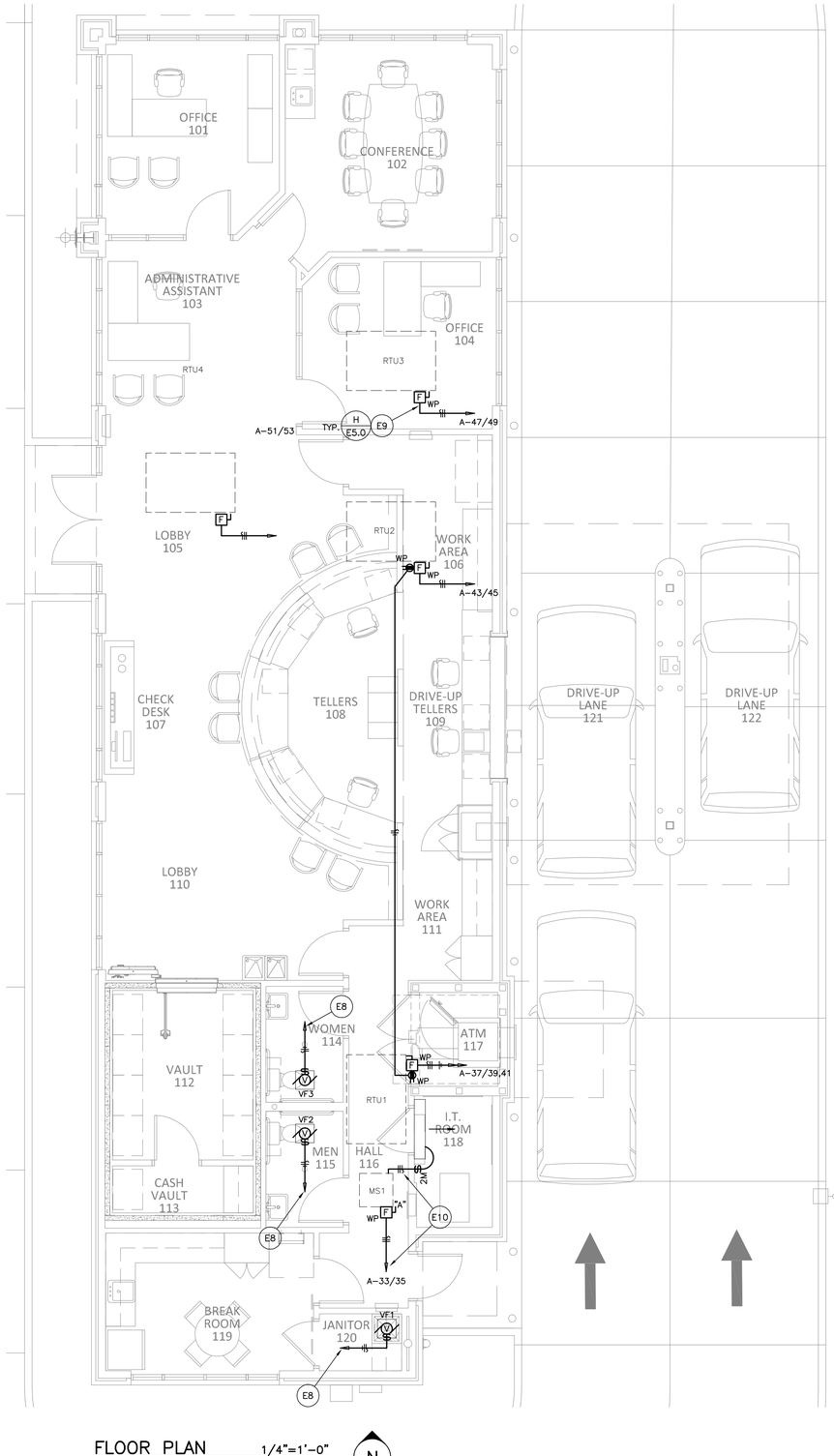

FLOOR PLAN 1/4"=1'-0"
MECHANICAL POWER

ELECTRICAL NOTES: (THIS SHEET ONLY)

- E1 AT TELLER TRANSACTION DRAWER.
- E2 AT NIGHT DEPOSIT. INSTALL AS REQUIRED BY NIGHT DEPOSIT MANUFACTURER.
- E3 AT OVERHEAD TELLER CONTROLS.
- E4 ENTER VAULT AT PRE-FAB CONDUIT PENETRATIONS. CONNECT TO VAULT ELECTRICAL AS REQUIRED.
- E5 AT WATER HEATER.
- E6 AT OVERHEAD TELLER TERMINAL FOR BLOWER AND CONTROLS.
- E7 AT ATM MACHINE. VERIFY EXACT REQUIREMENT AND LOCATION BEFORE ROUGH-IN.
- E8 CONNECT TO SWITCHED LIGHTING CIRCUIT IN THIS SPACE. SO THAT VENT FAN IS SWITCHED ON/OFF WITH THE LIGHTS.
- E9 RISE CONDUIT UP INSIDE RTU ROOF CURB. TYPICAL FOR ALL ROOF TOP UNITS.
- E10 PENETRATE ROOF AT SAME LOCATION AS REFRIGERANT PIPING. COORDINATE CLOSELY WITH MECHANICAL CONTRACTOR TO INSURE ADEQUATE NUMBER OF PENETRATION AT ROOF CURB.
- E11 KILOWATT-HOUR DEMAND METER. COORDINATE CLOSELY WITH POWER COMPANY.
- E12 FUSED MAIN DISCONNECT. SEE ELECTRICAL RISER DIAGRAM.
- E13 DOUBLE THROW MANUAL TRANSFER SWITCH FOR PORTABLE GENERATOR CONNECTION. SEE ELECTRICAL RISER DIAGRAM.
- E14 VERIFY EXACT LOCATION OF RECEPTACLES, AND ROUTING OF CONDUIT, IN CASEWORK BEFORE ROUGH-IN.
- E15 IN ATTIC SPACE, NEAR ATTIC ACCESS HATCH. VERIFY EXACT LOCATION WITH ARCHITECT.
- E16 NEMA L5-30R TWIST LOCK RECEPTACLE. VERIFY EXACT LOCATION WITH ARCHITECT AND OWNER BEFORE ROUGH-IN.

12" 0" 5' 10'
SCALE: 1/4 INCH = 1 FOOT

STATE OF LOUISIANA
J. P. FOREMAN
REG. No. 22378
REGISTERED PROFESSIONAL ENGINEER IN ELECTRICAL ENGINEERING
4-24-2023

JOHN J. GUTH ASSOCIATES, INC
CONSULTING MECHANICAL AND ELECTRICAL ENGINEERS
208 MILAM STREET
SHREVEPORT, LOUISIANA 71101 7220
DESIGNER: MICHAEL J. CLARK
CHECKED BY: JPF

THESE DRAWINGS DO NOT INCLUDE NECESSARY COMPONENTS FOR CONSTRUCTION SAFETY.

ASHE | BROUSSARD | WEINZETTLE ARCHITECTS

This drawing and design are the property of Ashe Broussard Weinzettle Architects. They are submitted on the condition that they are not to be used, reproduced, or copied, in whole or in part, or used for furnishing information to others, without the prior written consent of Ashe Broussard Weinzettle Architects. All common law rights of copyright and otherwise are hereby specifically reserved.

REVISIONS

revision	description	date
	-	-
	-	-

RED RIVER BANK

1918 Veterans Boulevard
Metairie, Louisiana 70005

sheet contents
SITE PLAN, FLOOR PLAN & ROOF PLAN - POWER

project no. 2021.53
drawn MAD
checked JPF
project date April 2023
drawing no. E2.0

DATE DRAWING LAST SAVED: 04/24/23 TIME:10:34:49
DATE DRAWING LAST PLOTTED: 04/24/23 TIME:10:34:50

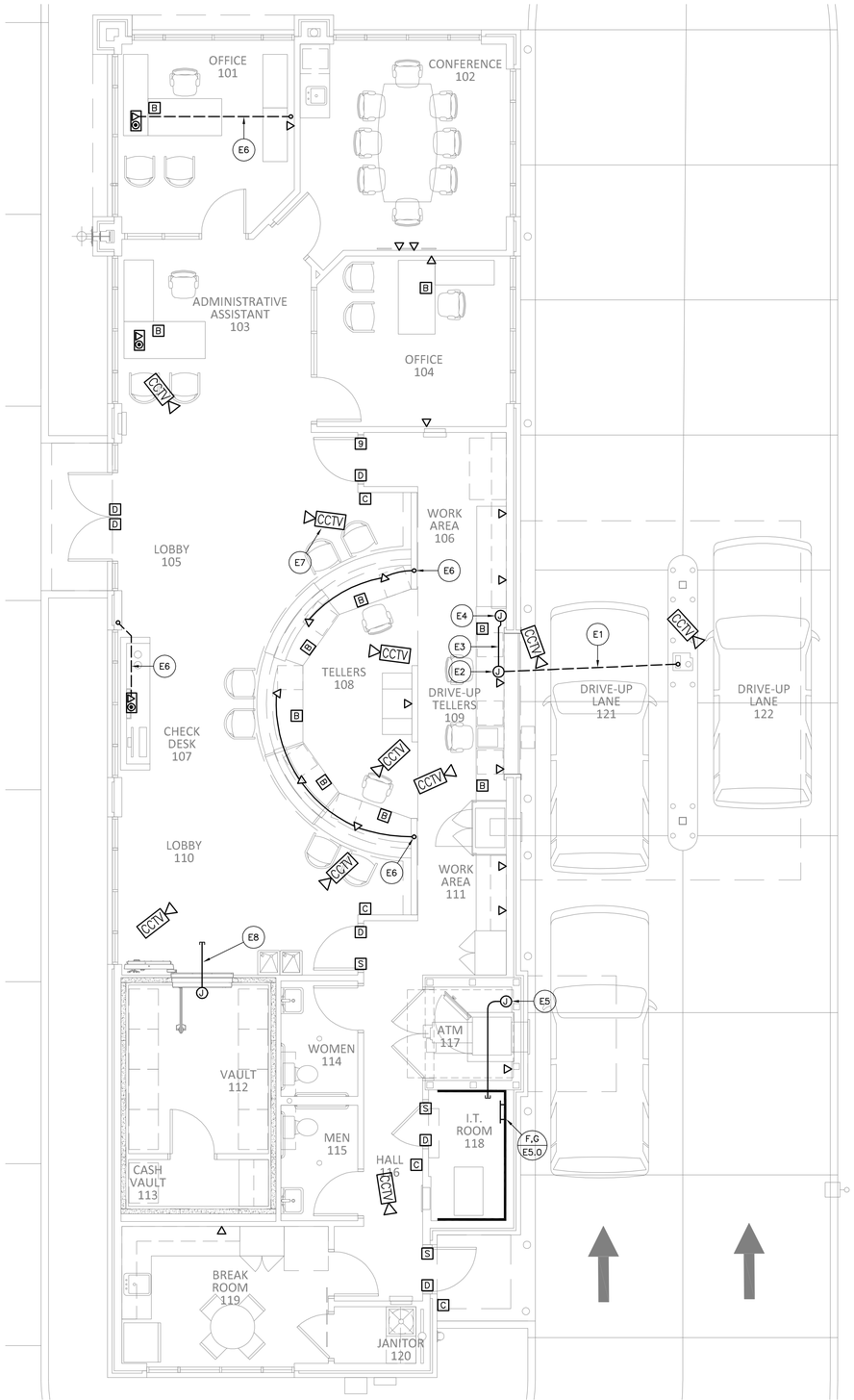

FLOOR PLAN 1/4"=1'-0"
SIGNAL

N

ELECTRICAL NOTES: (THIS SHEET ONLY)

E1 1" CONDUIT, WITH PULL WIRE, FROM ISLAND PEDESTAL TO JUNCTION BOX BELOW WINDOW FOR DATA/AUDIO/VIDEO LOW VOLTAGE CONDUCTORS. VERIFY EXACT REQUIREMENTS AND LOCATIONS, WITH BANK EQUIPMENT CONTRACTOR, BEFORE ROUGH-IN.

E2 4"x4" JUNCTION BOX BELOW WINDOW FOR DATA/AUDIO/VIDEO INTERCONNECT. VERIFY EXACT LOCATION BEFORE ROUGH-IN.

E3 1" CONDUIT, WITH PULL WIRE, BETWEEN LOWER AND UPPER JUNCTION BOXES FOR DATA/AUDIO/VIDEO INTERCONNECT.

E4 4"x4" JUNCTION BOX ABOVE CEILING AT OVERHEAD OPERATOR UNIT FOR DATA/AUDIO/VIDEO INTERCONNECT. VERIFY EXACT LOCATION, WITH BANK EQUIPMENT CONTRACTOR, BEFORE ROUGH-IN.

E5 JUNCTION BOX WITH 1 1/2"C. TO I.T. ROOM 118 FOR ALARM ATM INTERFACE CABLE. VERIFY EXACT REQUIREMENTS BEFORE ROUGH-IN.

E6 3/4"C. WITH PULL WIRE TO ABOVE ACCESSIBLE CEILING.

E7 VERIFY QUANTITY AND LOCATIONS OF OF CAMERA OUTLETS WITH OWNER.

E8 3/4" C. WITH PULL WIRE, FOR DATA REQUIRED FOR VAULT. VERIFY EXACT REQUIREMENTS WITH VAULT CONTRACTOR BEFORE ROUGH-IN.

12" 0" 5' 10'
SCALE: 1/4 INCH = 1 FOOT

STATE OF LOUISIANA
J. P. FOREMAN
REG. No. 22378
REGISTERED PROFESSIONAL ENGINEER
IN ELECTRICAL ENGINEERING
4-24-2023

JOHN J. GUTH ASSOCIATES, INC
CONSULTING MECHANICAL AND ELECTRICAL ENGINEERS
208 MILAM STREET
SHREVEPORT, LOUISIANA 71101 7220

DESIGNER: MICHAEL J. CLARK

CHECKED BY: JPF

THESE DRAWINGS DO NOT INCLUDE NECESSARY COMPONENTS FOR CONSTRUCTION SAFETY.

ASHE | BROUSSARD | WEINZETTLE ARCHITECTS

This drawing and design are the property of Ashe Broussard Weinzettle Architects. They are submitted on the condition that they are not to be used, reproduced, or copied, in whole or in part, or used for furnishing information to others, without the prior written consent of Ashe Broussard Weinzettle Architects. All common law rights of copyright and otherwise are hereby specifically reserved.

REVISIONS

revision	description	date
	-	-
	-	-

RED RIVER BANK

1918 Veterans Boulevard
Metairie, Louisiana 70005

project no. 2021.53
drawn AJL
checked JPF
project date April 2023

sheet contents
SITE PLAN, FLOOR PLAN & ROOF PLAN - SIGNAL

drawing no. E3.0

DATE DRAWING LAST SAVED: 04/24/23 TIME:10:35:46 DATE DRAWING LAST PLOTTED: 04/24/23 TIME:10:35:47

ELECTRICAL SYMBOLS

SYMBOL	DESCRIPTION	SYMBOL	DESCRIPTION
	L.E.D. LIGHTING FIXTURE		MOTOR, AS INDICATED
	L.E.D. LIGHTING FIXTURE WITH EMERGENCY BATTERY PACK	MD	MANUAL DOUBLE THROW TRANSFER SWITCH WITH GENERATOR QUICK CONNECT RECEPTACLES
	L.E.D. WALL MOUNTED LIGHTING FIXTURE		PANELBOARD, SURFACE MOUNTED AND FLUSH MOUNTED RESPECTIVELY
	L.E.D. LIGHTING FIXTURE		MOTOR WITH DISCONNECT SWITCH – PROVIDE TOGGLE SWITCH, MANUAL STARTER OR SAFETY SWITCH AS REQUIRED BY CODE FOR MOTOR RATING
	L.E.D. WALL MOUNTED LIGHTING FIXTURE	EWC	ELECTRIC WATER COOLER
	EXIT SIGN FIXTURE – DIRECTIONAL ARROWS AS INDICATED	WP	WEATHERPROOF
	TRACK LIGHTING – SEE LIGHTING FIXTURE SCHEDULE	AFF	ABOVE FINISHED FLOOR
	POLE MOUNTED FLOOD LIGHTING FIXTURE	ETR	EXISTING TO REMAIN
	POLE MOUNTED LIGHTING FIXTURE	OHP	OVERHEAD PRIMARY
S	SINGLE POLE TOGGLE SWITCH – HUBBELL #1221–MOUNT CENTERLINE 48" AFF	UGS	UNDERGROUND SECONDARY
S P	SINGLE POLE TOGGLE SWITCH WITH PILOT – HUBBELL #1221 WITH P & S #437 PILOT IN TWO GANG BOX WITH SINGLE DEVICE PLATE–MOUNT CENTERLINE 48" AFF	E1	ELECTRICAL NOTE REFERENCE
S 2	DOUBLE POLE TOGGLE SWITCH – HUBBELL #1222–MOUNT CENTERLINE 48" AFF	A / E1	DETAIL DESIGNATION / SHEET NUMBER
S C	CONTROL SWITCH FURNISHED WITH EQUIPMENT–MOUNT CENTERLINE 48" AFF		WALL OUTLET FOR COMBINATION TELEPHONE AND DATA – USE WALL TELEPHONE OUTLET AND PLATE–MOUNT CENTERLINE 18" AFF (B / E5.0)
S M	MOTOR RATED TOGGLE SWITCH–MOUNT CENTERLINE 48" AFF	WAP	OUTLET FOR WIRELESS ACCESS POINT
	PHOTOCELL–MOUNT 10' ABOVE FINISH GRADE		COMBINATION DUPLEX FLOOR RECEPTACLE/TEL./DATA FLOOR RECEPTACLE. 125V–1P–20A – HUBBELL#5362/B4233/(2)S3825 OR EQUAL. MOUNT FLUSH IN FLOOR.
	CONDUIT AND WIRING RUN CONCEALED IN WALLS OR ABOVE CEILING	1	FIRE ALARM SYSTEM CONTROL PANEL
	CONDUIT AND WIRING RUN IN OR BELOW FLOOR OR BELOW GRADE (C / E5.0)	2	FIRE ALARM SYSTEM MANUAL PULL STATION – MOUNT CENTERLINE 48" AFF
	NEUTRAL AND PHASE OR SWITCHED CONDUCTOR RESPECTIVELY	4 #	FIRE ALARM SYSTEM VISUAL SIGNAL – ADA COMPLIANT – MOUNT BOTTOM OF LENS 6" BELOW CEILING OR 80" AFF WHICHEVER IS LOWER–# INDICATES CANDELA RATING
	GROUND CONDUCTOR, GREEN INSULATED	5	FIRE ALARM SYSTEM AUDIBLE AND VISUAL SIGNAL – MOUNT BOTTOM OF LENS 6" BELOW CEILING OR 80" AFF WHICHEVER IS LOWER–SEE "3" & "4" ABOVE FOR RATINGS
L–1,3	HOMERUN TO PANEL (CIRCUIT NUMBERS INDICATED)	6	FIRE ALARM SYSTEM AREA TYPE SMOKE DETECTOR
	CONDUIT TURNED UP; CONDUIT TURNED DOWN RESPECTIVELY	9	FIRE ALARM SYSTEM DUCT SMOKE DETECTOR
	CONDUIT OR DUCT STUB–OUT – PROVIDE CAP AND MARK FOR FUTURE LOCATION	10	FIRE ALARM SYSTEM ADDRESSABLE MONITOR MODULE RELAY WHERE REQUIRED
	DUPLEX RECEPTACLE, 125V–1P–20A – HUBBELL #5362–MOUNT CENTERLINE 18" AFF UNLESS NOTED (A / E5.0)	11	FIRE ALARM SYSTEM ADDRESSABLE CONTROL MODULE AND AUXILIARY RELAY WHERE REQUIRED
	DOUBLE DUPLEX RECEPTACLE (SEE RECEPTACLE SYMBOLS) MOUNTED ABOVE COUNTER–MOUNT BOTTOM 6" ABOVE COUNTER OR 2" ABOVE BACKSPLASH	S	SOUND SYSTEM
	DOUBLE DUPLEX RECEPTACLE, 125V–1P–20A – HUBBELL #5362–MOUNT CENTERLINE 18" AFF UNLESS NOTED	TV	WALL TELEVISION OUTLET–12" BELOW CEILING UNLESS OTHERWISE NOTED
	OUTLET FOR DIRECT CONNECTION, BY CONTRACTOR, TO EQUIPMENT–MOUNT AS REQUIRED FOR EQUIPMENT	V	OUTLET FOR VIDEO SIGNAL CABLE – IN FLOOR BOX OR 18" AFF IN WALL AS INDICATED
	OUTLET FOR FUTURE DIRECT CONNECTION BY OTHERS–MOUNT AS REQUIRED FOR EQUIPMENT	T	ROUGH–IN FOR FLAT SCREEN VIDEO DISPLAY TERMINAL SIGNAL CABLE
WP	GFCI RECEPTACLE (SEE RECEPTACLE SYMBOLS) SURFACE MOUNTED HORIZONTALLY–WITH TAYMAC #60310 WEATHERPROOF DEVICE PLATE	CCTV	ROUGH–IN FOR SURVEILLANCE CCTV
J	JUNCTION BOX (JB)	C	ROUGH–IN FOR ACCESS CONTROL CARD READER
	DUPLEX RECEPTACLE, 125V–1P–20A, GROUND FAULT CURRENT INTERRUPTING TYPE – HUBBELL #GF5362–MOUNT CENTERLINE 18" AFF UNLESS NOTED	S	ROUGH–IN FOR ACCESS CONTROL ELECTRIC STRIKE
	DUPLEX RECEPTACLE (SEE RECEPTACLE SYMBOLS) MOUNTED ABOVE COUNTER–MOUNT BOTTOM 6" ABOVE COUNTER OR 2" ABOVE BACKSPLASH	M	ROUGH–IN FOR ACCESS CONTROL MOTION DETECTOR
C	LIGHTING CONTACTOR	P	ROUGH–IN FOR ACCESS CONTROL SYSTEM CONTROL PANEL
V	VENTILATING FAN MOTOR	D	ROUGH–IN FOR MAGNETIC DOOR SWITCH

NOTE: DASHED SYMBOLS REPRESENT EXISTING EQUIPMENT TO BE REMOVED UNLESS SPECIFICALLY NOTED OTHERWISE.
SOLID LIGHT SYMBOLS REPRESENT EXISTING EQUIPMENT TO REMAIN AS IS UNLESS SPECIFICALLY NOTED OTHERWISE.
SOLID HEAVY SYMBOLS REPRESENT NEW EQUIPMENT

PANELBOARD AND FEEDER SCHEDULE

MARK	MAINS	BRANCH	BRANCH DES.	BRANCH SIZE	FEEDING
"A"	120/240V–1ø 3W–S/N W/GND BUS 400A MAIN LUGS ONLY 60–POLE PANELBOARD WITH INTEGRAL SPD/TVSS AND A MIN. 10,000 AIC	4–20A–1P	1–4	AS PER SPECIFICATIONS	LIGHTING
		1–20A–1P	5	AS PER SPECIFICATIONS	EXTERIOR LIGHTING
		1–20A–2P	6/8	2#10,1#10G–3/4"C.	EXTERIOR LIGHTING
		1–20A–1P	7	AS PER SPECIFICATIONS	EXTERIOR LIGHTING CONTROLS
		1–20A–1P	11	AS PER SPECIFICATIONS	COPIER/PRINTER
		4–20A–1P (1)	7,9,10,12	---	SPARES
		1–20A–1P	12	AS PER SPECIFICATIONS	SIGN
		3–20A–1P	13,15,17	AS PER SPECIFICATIONS	RECEPTACLES 108
		1–20A–1P	19	AS PER SPECIFICATIONS	RECEPTACLES 111
		1–20A–1P	21	AS PER SPECIFICATIONS	NIGHT DEPOSIT
		1–20A–1P	23	AS PER SPECIFICATIONS	TRANSACTION DRAWER
		2–20A–1P	25,27	AS PER SPECIFICATIONS	RECEPTACLES 109
		1–20A–1P	29	AS PER SPECIFICATIONS	RECEPTACLES 106
		1–20A–1P	31	AS PER SPECIFICATIONS	DRIVE–THRU PEDESTAL
		4–20A–1P	14,16,18,20	AS PER SPECIFICATIONS	RECEPTACLES 119
		1–20A–1P	22	AS PER SPECIFICATIONS	REFRIGERATOR 119
		1–20A–1P	24	AS PER SPECIFICATIONS	RECEPTACLES 114/115
		3–20A–1P	26,28,30	AS PER SPECIFICATIONS	RECEPTACLES I.T.
		1–30A–1P	32	2#10,1#10G–1/2"C.	RECEPTACLES I.T.
		1–20A–1P	34	AS PER SPECIFICATIONS	ELECTRIC WATER COOLER
		1–20A–1P	36	AS PER SPECIFICATIONS	VAULT
		1–20A–1P	38	AS PER SPECIFICATIONS	RECEPTACLES 107
		1–20A–1P	40	AS PER SPECIFICATIONS	RECEPTACLES 103
		1–20A–1P	42	AS PER SPECIFICATIONS	RECEPTACLES 104
		1–20A–1P	44	AS PER SPECIFICATIONS	RECEPTACLES 102
		1–20A–1P	46	AS PER SPECIFICATIONS	RECEPTACLES 101
		2–20A–1P	48,50	AS PER SPECIFICATIONS	RECEPTACLES 102
		1–20A–2P	52/54	2#12,1#12G–1/2"C.	WATER HEATER 102
		1–25A–2P	56/58	2#10,1#10G–1/2"C.	WATER HEATER 120
		1–20A–2P	33/35	2#12,1#12G–1/2"C.	MINI–SPLIT MS–1
		1–90A–2P	37/39	2#2,1#8G–1 1/4"C.	ROOFTOP UNIT RTU–1
		1–20A–2P	41	AS PER SPECIFICATIONS	ROOFTOP MAINT. RECEPTACLES
		1–70A–2P	43/45	2#4,1#8G–1"C.	ROOFTOP UNIT RTU–2
		1–60A–2P	47/49	2#4,1#8G–1"C.	ROOFTOP UNIT RTU–3
		1–60A–2P	51/53	2#4,1#8G–1"C.	ROOFTOP UNIT RTU–4
		4–20A–1P (1)	55,57,59,60	---	SPARES

NOTES:
(1) TURN ALL SPARE BREAKERS TO THE OFF POSITION.

LIGHTING FIXTURE SCHEDULE

MARK	MANUFACTURER	CATALOG NO.	LAMP	MTG.	REMARKS
A1	COLUMBIA	CB22–LSCS	L.E.D.	REC.	2'x2' BACK–LIT FLAT PANEL WITH SWITCHABLE LUMEN OUTPUT AND COLOR. SET LUMEN OUTPUT TO 4400 LUMENS AND COLOR TEMPERATURE TO 3500K.
A2(E)	COLUMBIA	CB24–LSCS–(ELL10)	L.E.D.	REC.	2'x4' BACK–LIT FLAT PANEL WITH SWITCHABLE LUMEN OUTPUT AND COLOR. SET LUMEN OUTPUT TO 3300 LUMENS AND COLOR TEMPERATURE TO 3500K. ON EMERGENCY (E) FIXTURES, PROVIDE A 1000 LUMEN EMERGENCY BATTERY PACK. CONNECT CHARGER TO UNSWITCHED LEG.
A3	COLUMBIA	CB24–LSCS	L.E.D.	REC.	2'x4' BACK–LIT FLAT PANEL WITH SWITCHABLE LUMEN OUTPUT AND COLOR. SET LUMEN OUTPUT TO 4400 LUMENS AND COLOR TEMPERATURE TO 3500K.
A4	COLUMBIA	CB24–LSCS	L.E.D.	REC.	2'x4' BACK–LIT FLAT PANEL WITH SWITCHABLE LUMEN OUTPUT AND COLOR. SET LUMEN OUTPUT TO 5500 LUMENS AND COLOR TEMPERATURE TO 3500K.
B1(E)	FOCAL POINT	FEQ2–24–MG–5500L–35K–1C–UNV–LD1–G1–(EM)–WH	L.E.D.	REC.	2'x4' BACK–LIT ARCHITECTURAL TROFFER. ANGLED DIFFUSER WITH CENTER MICROPRISMATIC LENS. 5500 LUMENS. 3500K COLOR TEMPERATURE. 0–10V DIMMING TO 10%. ON EMERGENCY (E) FIXTURES, PROVIDE A 10W BATTERY PACK. CONNECT CHARGER TO UNSWITCHED LEG.
C1	BEACON	VSH–30–4K7–UNV–WHT	L.E.D.	SURF.	15" SQUARE L.E.D. CANOPY LIGHT. 4600 LUMENS. 4000K COLOR TEMPERATURE. SURFACE MOUNT TO BOTTOM SIDE OF CANOPY. COORDINATE ROUTING OF CONDUIT WITH ARCHITECT BEFORE BEGINNING WORK. WHITE FINISH.
C2	BEACON	VSH–140–4K7–UNV–WHT	L.E.D.	SURF.	15" SQUARE L.E.D. CANOPY LIGHT. 19,000 LUMENS. 4000K COLOR TEMPERATURE. SURFACE MOUNT TO BOTTOM SIDE OF CANOPY. COORDINATE ROUTING OF CONDUIT WITH ARCHITECT BEFORE BEGINNING WORK. WHITE FINISH.
D1(E)	PRESCOLITE	LTR–6RD–H–SL–10L–DMI–(EM)–LTR–6RD–T–SL–35K–8–WD–SS–B24–(EM)	L.E.D.	REC.	6" DOWNLIGHT. 1000 LUMENS. 3500K COLOR TEMPERATURE. SEMI–SPECULAR REFLECTOR. WIDE DISTRIBUTION ON EMERGENCY (E) FIXTURES, PROVIDE A 10W BATTERY PACK. CONNECT CHARGER TO UNSWITCHED LEG. INTEGRAL TEST SWITCH.
D2(E)	PRESCOLITE	LTR–6RD–H–ML–20L–DMI–(EM)–LTR–6RD–T–SL–35K–8–WD–SS–B24–(EM)	L.E.D.	REC.	6" DOWNLIGHT. 2000 LUMENS. 3500K COLOR TEMPERATURE. SEMI–SPECULAR REFLECTOR. WIDE DISTRIBUTION ON EMERGENCY (E) FIXTURES, PROVIDE A 10W BATTERY PACK. CONNECT CHARGER TO UNSWITCHED LEG. INTEGRAL TEST SWITCH.
F1	GVA LIGHTING	FL100–BL*–4000K–10–AC277–TM200–121891*	L.E.D.	POLE	ARCHITECTURAL FLOOD LIGHT. 10,000 LUMENS. 4000K COLOR TEMPERATURE. 10' X 10' DISTRIBUTION. BLACK FINISH.* VERIFY FINISH WITH ARCHITECT. TENON MOUNT ON TOP OF "P2" PARKING LOT LIGHT POLE. AIM FIXTURE TO MAXIMIZE LIGHT ON FLAG IN ALL POSITIONS. CONNECT TO SWITCH ON/OFF WITH THE "F2" FIXTURE.
G1	---	---	L.E.D.	---	LANE OPEN/CLOSED SIGN LIGHT, PROVIDED AS PART OF BANK EQUIPMENT PACKAGE, BY OWNER'S BANK EQUIPMENT SUPPLIER, AND INSTALLED BY ELECTRICAL CONTRACTOR.
H1	PRESCOLITE	LBSE–6RD–35K8–WH	L.E.D.	WALL	6" SURFACE MOUNTED EDGE–LIT FIXTURE, MOUNTED IN ROOF HATCH LADDER SHAFT. 1000 LUMENS, 3500K COLOR TEMPERATURE. SURFACE MOUNTS DIRECTLY TO 4" OUTLET BOX. VERIFY EXACT MOUNTING LOCATION IN SHAFT WITH ARCHITECT BEFORE ROUGH–IN.
K1	PASS AND SEYMOUR	272	L.E.D.	SURF.	MEDIUM BASE PORCELAIN, ONE PIECE KEYLESS LAMP HOLDER. PROVIDE A MINIMUM 850 LUMEN A–19 STYLE, MEDIUM BASE, L.E.D. LAMP. MOUNT LAMP HOLDER IN ATTIC SPACE AS DIRECTED BY ARCHITECT.
L1	LITECONTROL	SAE–104–P–LPA–8–8–50F–C1–35K–130–6D–D01–1C–UNV–FA1–L1–CB1	L.E.D.	PEND.	8' DIRECT/INDIRECT LINEAR PENDANT. 1300 LUMENS/FT. 3500K COLOR TEMPERATURE. 40% UPLIGHT/60% DOWNLIGHT. 0–10V DIMMING TO 1%. SUSPEND SO THAT BOTTOM OF FIXTURE IS 9'–0" AFF. WHITE FINISH.
P1	BEACON	VP–1–160L–75–4K7–3–UNV–ADU–DBT–AAU–SHD–1–HSS–90–B–MTG–ADU–DBT/SSS–B–20–40–B–1–B3–DBT	L.E.D.	POLE	L.E.D. LOW PROFILE AREA LIGHT. 10,000 LUMENS. 4000K COLOR TEMPERATURE. TYPE 3 DISTRIBUTION. UNIVERSAL VOLTAGE. UPSWEPT MOUNTING ARM. DARK BRONZE TEXTURED FINISH. VERIFY FINISH WITH ARCHITECT. HOUSE SIDE SHIELD. 20' SQUARE STRAIGHT STEEL POLE.
P2	BEACON	VP–1–160L–75–4K7–3–UNV–ADU–DBT–AAU–SHD–1–HSS–90–B–MTG–ADU–DBT/SSS–B–20–40–B–1/TA–B3–DBT	L.E.D.	POLE	L.E.D. LOW PROFILE AREA LIGHT. 10,000 LUMENS. 4000K COLOR TEMPERATURE. TYPE 3 DISTRIBUTION. UNIVERSAL VOLTAGE. UPSWEPT MOUNTING ARM. DARK BRONZE TEXTURED FINISH. VERIFY FINISH WITH ARCHITECT. HOUSE SIDE SHIELD. 20' SQUARE STRAIGHT STEEL POLE WITH SIDE MOUNT FOR AREA LIGHT AND 2.38" TENON FOR F1 FLOOD LIGHT MOUNT.
P3	BEACON	VP–F–1–36L–55–4K7–6X4–UNV–AAU–DBT–SHD–1–VISOR–DBT/SSS–B–20–40–B–1–B3–DBT	L.E.D.	POLE	L.E.D. LOW PROFILE AREA TYPE FLOOD LIGHT TO MATCH "P1" FIXTURE. 7500 LUMENS. 4000K COLOR TEMPERATURE. 6x4 DISTRIBUTION. UNIVERSAL VOLTAGE. ADJUSTABLE UPSWEPT ARM. HOUSE SIDE VISOR. 20' SQUARE STRAIGHT STEEL POLE. DARK BRONZE TEXTURED FINISH.
T1	LITON	LFCJX327S–W–48/LFM300/LTP103–36/LTP200/LTP101	L.E.D.	TRACK	LOW VOLTAGE TRACK LIGHTING SYSTEM, COMPLETE WITH BENDABLE TRACK, BENT TO A 9' RADIUS. SUSPEND AS INDICATED ON THE ARCHITECTURAL DRAWINGS. PENDANT STYLE TRACK HEAD. LOW VOLTAGE TRANSFORMER, POWER CABLE/CONNECTOR, AND SATIN WHITE GLASS DOME PENDANT. PROVIDE ALL HARDWARE AND EQUIPMENT FOR A FULL INSTALLATION. COORDINATE CLOSELY WITH THE ARCHITECT.
V1	COLUMBIA	CWM–2–35–VW–SM–FR–FA–E	L.E.D.	SURF.	2' DECORATIVE VANITY LIGHT. 1600 LUMENS. 3500K COLOR TEMPERATURE. FROSTED LENS WITH ALUMINUM END CAPS.
W1	KENALL	MS11FL–PP–DB–10L40K–120–LEL–SA	L.E.D.	WALL	12" SQUARE VANDAL RESISTANT DECORATIVE WALL MOUNT FIXTURE. 1300 LUMENS. 4000K COLOR TEMPERATURE. PEARLESCENT POLYCARBONATE LENS. EMERGENCY BATTERY BACKUP FOR EGRESS LIGHTING. CONNECT CHARGER TO UNSWITCHED LEG.
X1	COMPASS	CELSIGNE	L.E.D.	SURF.	EDGE–LIT EMERGENCY EXIT LIGHT. ACRYLIC PANEL WITH GREEN LETTERS. NI–CAD BATTERY. CONNECT TO UNSWITCHED LEG.

STATE OF LOUISIANA
J. P. FOREMAN
REG. No. 22378
REGISTERED PROFESSIONAL ENGINEER IN ELECTRICAL ENGINEERING
6-23-2023

JOHN J. GUTH ASSOCIATES, INC
CONSULTING MECHANICAL AND ELECTRICAL ENGINEERS
208 MILAM STREET
SHREVEPORT, LOUISIANA 71101 7220
DESIGNER: MICHAEL J. CLARK
CHECKED BY: JPF

THESE DRAWINGS DO NOT INCLUDE NECESSARY COMPONENTS FOR CONSTRUCTION SAFETY.

ASHE | BROUSSARD | WEINZETTLE ARCHITECTS

This drawing and design are the property of Ashe Broussard Weinzettle Architects. They are submitted on the condition that they are not to be used, reproduced, or copied, in whole or in part, or used for furnishing information to others, without the prior written consent of Ashe Broussard Weinzettle Architects. All common law rights of copyright and otherwise are hereby specifically reserved.

REVISIONS

revision	description	date
	-	-
	-	-

RED RIVER BANK
1918 Veterans Boulevard
Metairie, Louisiana 70005

project no. 2021.53
drawn SGI
checked JPF
project date April 2023

sheet contents: ELECTRICAL SCHEDULES

drawing no. E4.0

DATE DRAWING LAST SAVED:04/24/23 TIME:10:36:23
DATE DRAWING LAST PLOTTED: 04/24/23 TIME:10:36:24

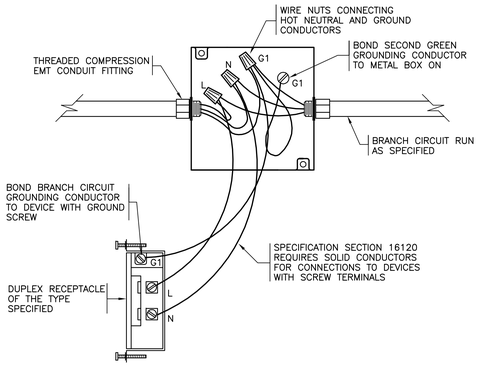

(A) DETAIL – RECEPTACLE INSTALLATION

NO SCALE

NOTE:

BRANCH CIRCUIT CONNECTIONS TO THE RECEPTACLES SHALL BE TAPPED FROM THE BRANCH CIRCUIT CONDUCTORS AS INDICATED. CIRCUITS SHALL NOT FEED THRU DEVICE OR BE STABBED INTO THE BACK OF THE DEVICE. GFCI RECEPTACLES SHALL NOT DISCONNECT DOWNSTREAM RECEPTACLES UNLESS SPECIFICALLY INDICATED OTHERWISE.

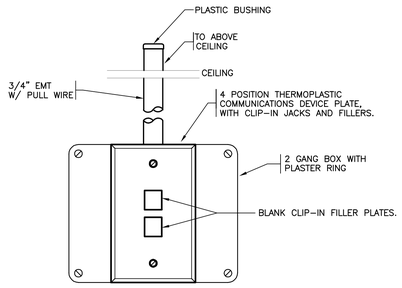

(B) DETAIL–COMMUNICATIONS OUTLET

NO SCALE

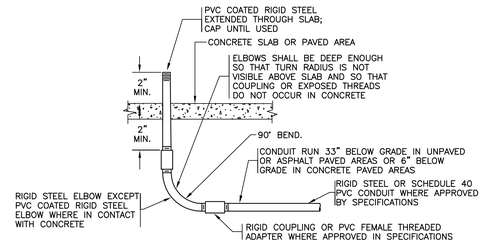

(C) DETAIL–CONDUIT PENETRATION THROUGH SLAB

NO SCALE

NOTE: WHERE PVC COATING IS REQUIRED, 2 LAYERS OF FIELD APPLIED BITUMINOUS OR PVC TAPE WRAPPING IS ACCEPTABLE.

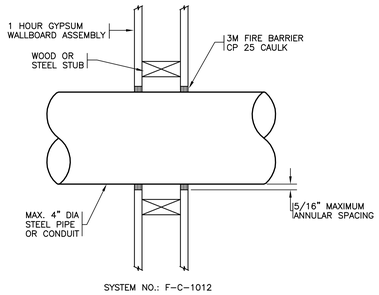

(D) PENETRATION FIRESTOP FOR 4" MAX. DIA. CONDUIT THROUGH A GYPSUM WALLBOARD ASSEMBLY

NO SCALE

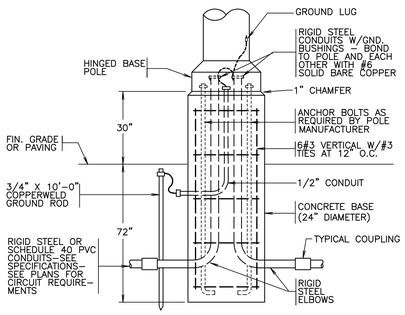

(E) DETAIL–LIGHT STANDARD BASE

NO SCALE

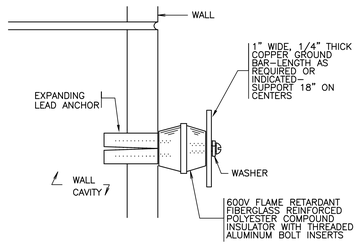

(F) DETAIL–GROUND BAR

NO SCALE

NOTES:

1. DRILL, TAP, AND SPLICE JOINTS USING FULL SIZE BAR AND 4 BOLTS.
2. PROVIDE FULL CAPACITY FLEXIBLE COPPER BRAIDED STRAP AT CORNERS.
3. PROVIDE #2/0 STRANDED COPPER GROUND WIRE BETWEEN BUS AND GROUND ROD. PROVIDE COMPRESSION END TERMINAL AT CONNECTION TO BUS.

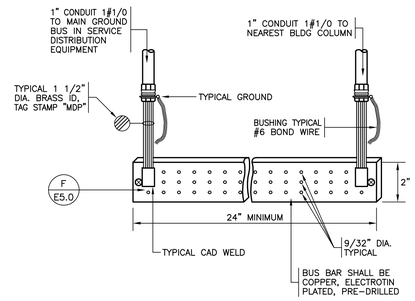

(G) TYPICAL TMGB GROUND BUS DETAIL

NO SCALE

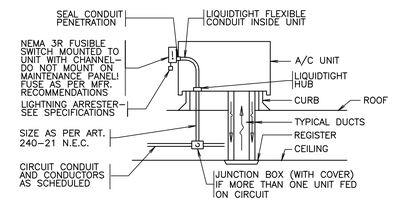

(H) DETAIL–POWER CONNECTION TO ROOFTOP A/C UNIT

NO SCALE

NOTES:

1. DISCONNECT, RECEPTACLE, RACEWAYS, BRACKETS, ETC. AND WIRING SHALL BE INSTALLED SO THAT IT DOES NOT INTERFERE WITH EQUIPMENT OPERATION OR ANY REQUIRED MAINTENANCE FUNCTION.
2. RECEPTACLE AND CONTROL CONDUITS SHALL ENTER UNIT IN THE SAME MANNER AS SHOWN FOR POWER CONDUITS.
3. WHERE SWITCH IS NOT MOUNTED ON UNIT, PROVIDE LIQUIDTIGHT HUB ON OUTSIDE OF UNIT AND EXTEND IN RIGID OR LIQUIDTIGHT CONDUIT TO DISCONNECT SWITCH.
4. LIMIT LENGTH OF LIQUIDTIGHT FLEXIBLE CONDUIT ON OUTSIDE OF UNIT TO 6 INCHES MAXIMUM.

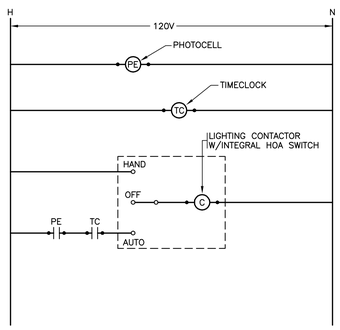

(I) EXTERIOR LIGHTING CONTROL DIAGRAM

NO SCALE

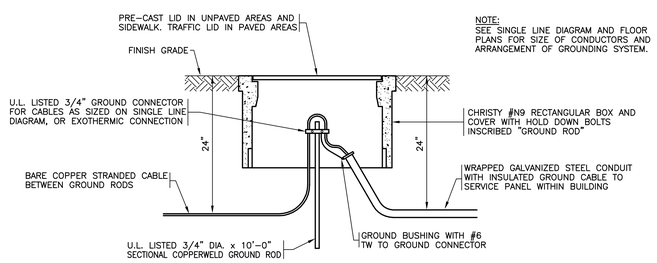

NOTE:
SEE SINGLE LINE DIAGRAM AND FLOOR PLANS FOR SIZE OF CONDUCTORS AND ARRANGEMENT OF GROUNDING SYSTEM.

(J) GROUND ROD AND INSPECTION WELL

NO SCALE

DATE DRAWING LAST SAVED: 04/24/23 TIME:10:36:59

DATE DRAWING LAST PLOTTED: 04/24/23 TIME:10:36:59

STATE OF LOUISIANA
J. P. FOREMAN
REG. No. 22378
REGISTERED PROFESSIONAL ENGINEER
ELECTRICAL ENGINEERING
4-24-2023

JOHN J. GUTH ASSOCIATES, INC
CONSULTING MECHANICAL AND ELECTRICAL ENGINEERS
208 MILAM STREET
SHREVEPORT, LOUISIANA 71101 7220

DESIGNER: MICHAEL J. CLARK

CHECKED BY: JPF

THESE DRAWINGS DO NOT INCLUDE NECESSARY COMPONENTS FOR CONSTRUCTION SAFETY.

ASHE | BROUSSARD | WEINZETTLE ARCHITECTS

This drawing and design are the property of Ashe Broussard Weinzettle Architects. They are submitted on the condition that they are not to be used, reproduced, or copied, in whole or in part, or used for furnishing information to others, without the prior written consent of Ashe Broussard Weinzettle Architects. All common law rights of copyright and otherwise are hereby specifically reserved.

REVISIONS

revision	description	date
	-	-
	-	-

RED RIVER BANK

1918 Veterans Boulevard
Metairie, Louisiana 70005

project no. 2021.53
drawn AJL
checked JPF
project date April 2023

sheet contents: ELECTRICAL DETAILS

drawing no. E5.0